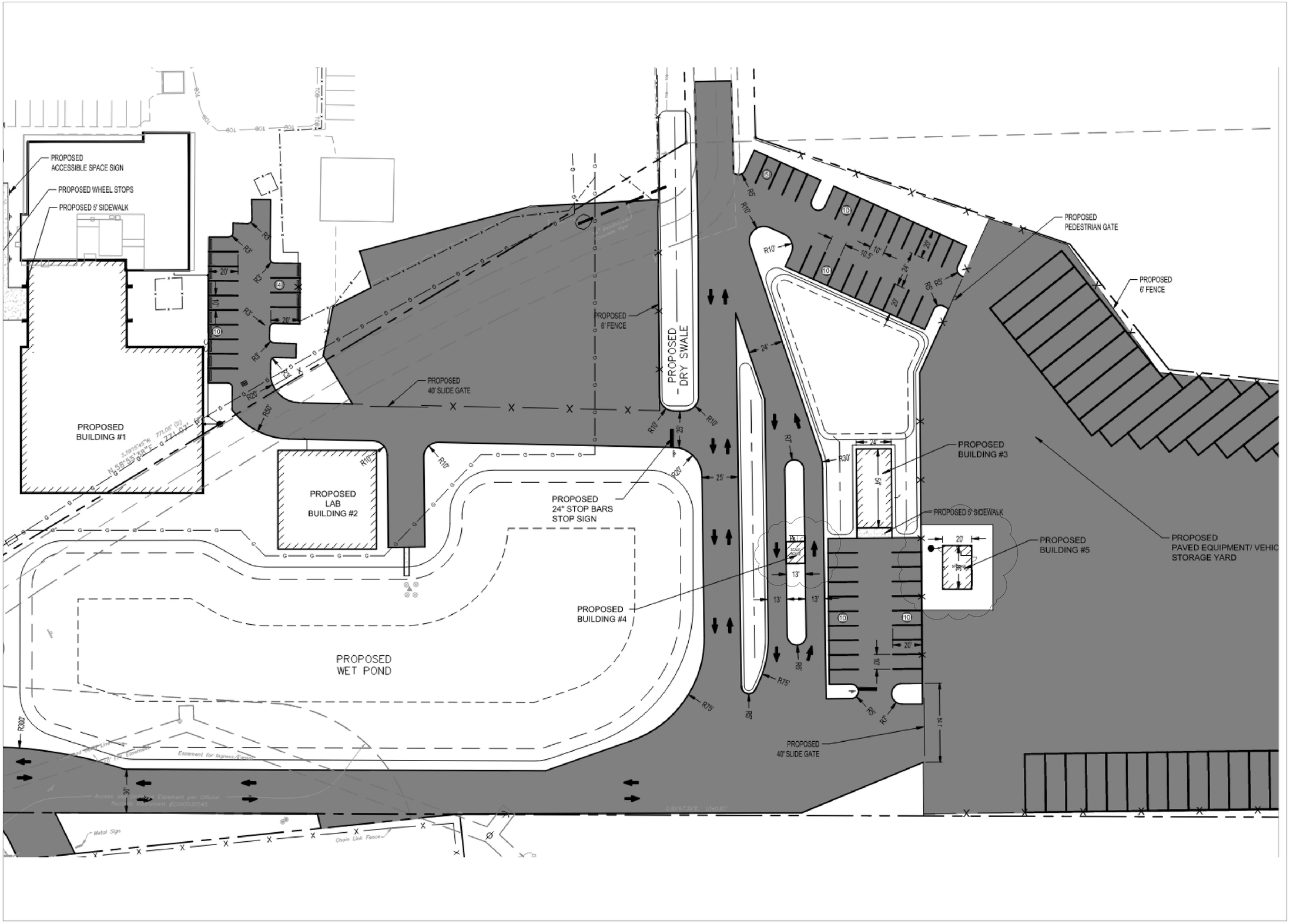

J2 SOLUTIONS
BUILDING. BETTER. CONTRACTING.
CGC 062867
779 Commerce Drive, Suite 1
Venice, FL 34292
(941) 492-3266 - www.J2SolutionsInc.com

Project Information

AJAX PAVING

AJAX The Future is Riding on AJAX.

NORTH VENICE, FL

Drawing Title

BUILDINGS 4&5

OVERALL PROPOSED SITE

Consultants

Submittals

Issued For	Date
☑ review	8.28.25
☐ record	
☐ use	
☐ permit	
☐ other:	

Revisions

No	Description	Date

Control

designed	AH
drawn	AH
checked	SH
scale	NTS

Sheet No.

CS-1.0

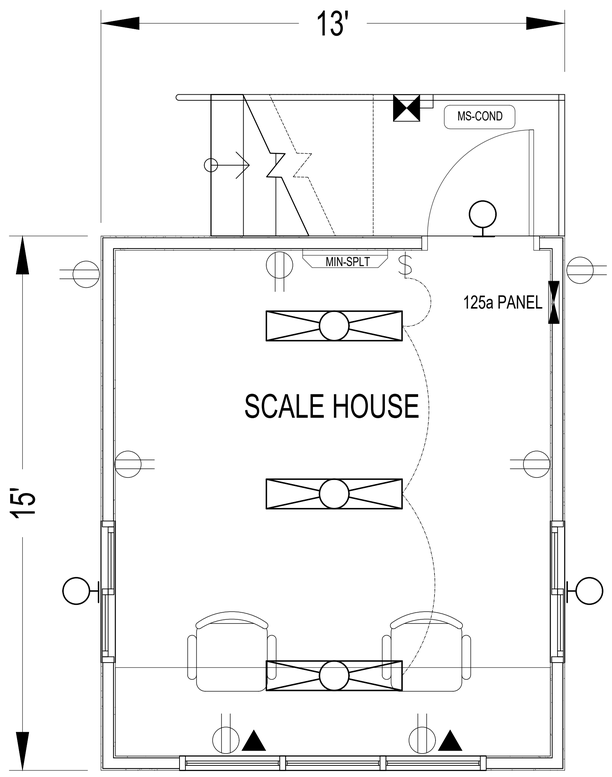

FLOOR PLAN

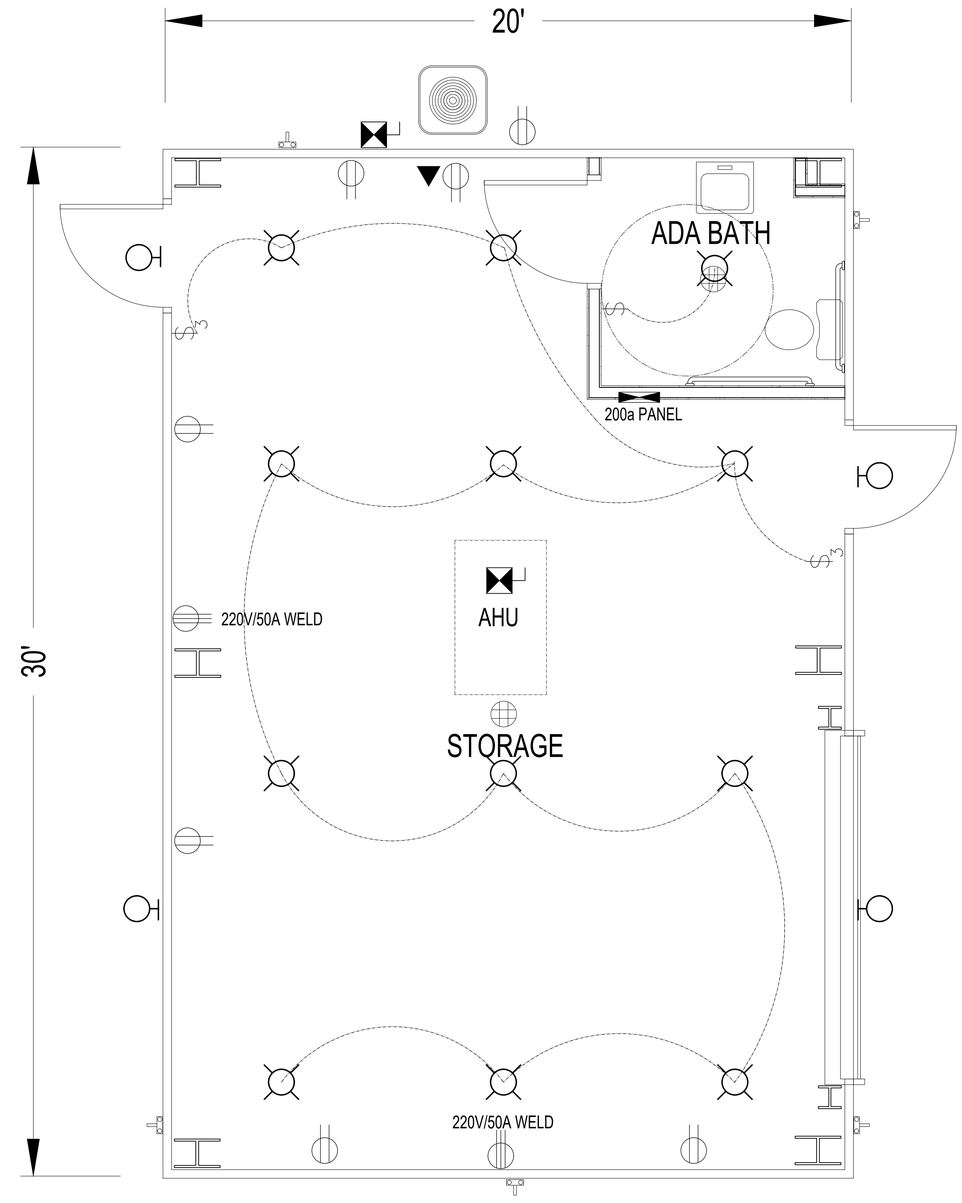

FLOOR PLAN

J2 SOLUTIONS
BUILDING. BETTER. CONTRACTING.
CGC 062867
779 Commerce Drive, Suite 1
Venice, FL 34292
(941) 492-3266 - www.J2SolutionsInc.com

Project Information

AJAX PAVING

AJAX The Future is Riding on AJAX.

NORTH VENICE, FL

Drawing Title

BUILDINGS 4&5
FLOOR PLANS

Consultants

Submittals

Issued For	Date
☑ review	8.28.25
☐ record	
☐ use	
☐ permit	
☐ other:	

Revisions

No	Description	Date

Control

designed	AH
drawn	AH
checked	SH
scale	NTS

Sheet No.

A1.0

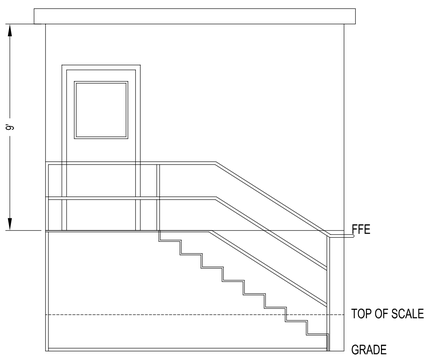

NORTH

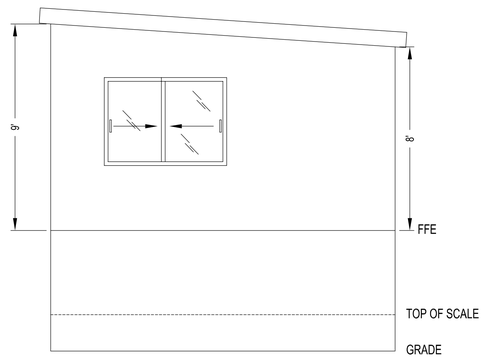

EAST

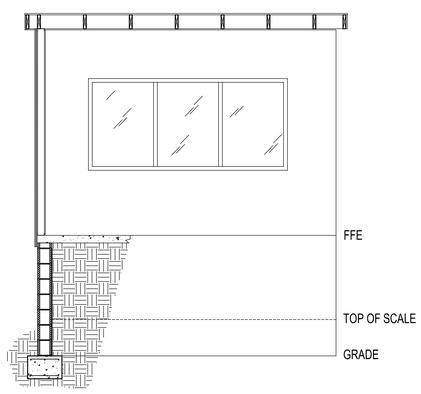

SOUTH

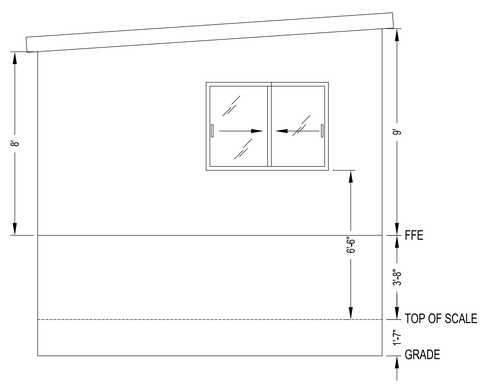

WEST

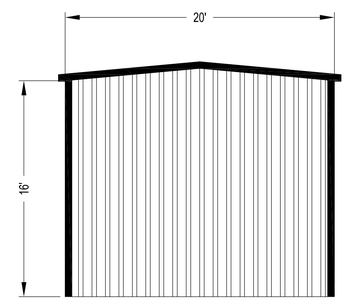

NORTH

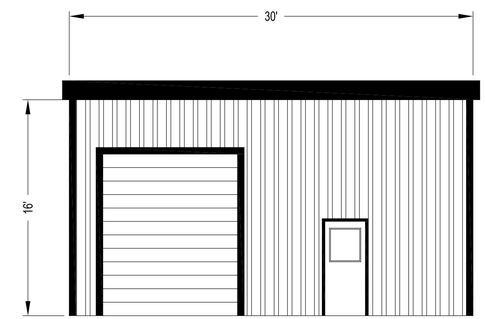

EAST

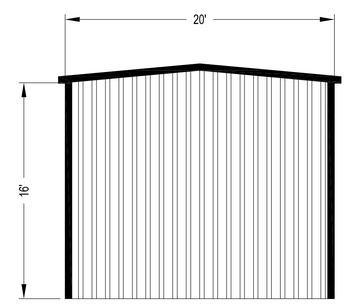

SOUTH

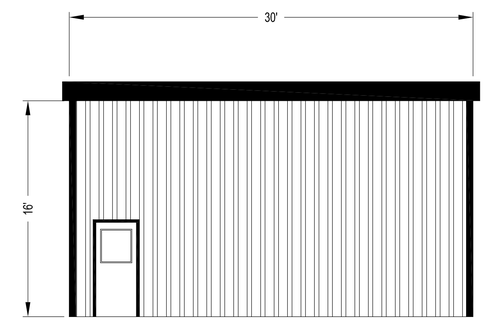

WEST

J2 SOLUTIONS
BUILDING. BETTER. CONTRACTING.
CGC 062867
779 Commerce Drive, Suite 1
Venice, FL 34292
(941) 492-3266 - www.J2SolutionsInc.com

Project Information

AJAX PAVING

AJAX
The Future is Riding on AJAX.

NORTH VENICE, FL

Drawing Title

BUILDINGS 4&5
ELEVATIONS

Consultants

Submittals

Issued For	Date
☑ review	9.4.25
☐ record	
☐ use	
☐ permit	
☐ other:	

Revisions

No	Description	Date

Control

designed	AH
drawn	AH
checked	SH
scale	NTS

Sheet No.

A1.1