PRELIMINARY PLAT
FOR
PORTOFINO CMU (AKA MIRASOL CMU)

A 12 LOT COMMERCIAL MIXED-USE DEVELOPMENT
LYING IN SECTION 27, TOWNSHIP 38 SOUTH, RANGE 19 EAST, CITY OF VENICE, SARASOTA COUNTY, FLORIDA.

A REPLAT OF LOT 1, LAUREL ROAD PROPERTY, AS RECORDED IN PLAT BOOK 48, PAGES 37 & 37A, PUBLIC RECORDS OF SARASOTA COUNTY, FLORIDA AND LYING IN SECTION 27, TOWNSHIP 38 SOUTH, RANGE 19 EAST, SARASOTA COUNTY, FLORIDA.

GENERAL NOTES:

1. **OWNERSHIP AND UNIFIED CONTROL STATEMENT:**
   THE PROPOSED PROJECT IS OWNED BY 2 ENTITIES:
   A. LAUREL ROAD DEVELOPMENT, LLC
   B. TRI OF TREVISO GRAND, LLC
2. **CHARACTER AND INTENDED USE STATEMENT**
   COMMERCIAL MIXED USE
3. **EXISTING LAND USE:**
   VACANT
   TREVISO GRAND APARTMENTS
4. **ZONING/PROPERTY ID:**
   COMMERCIAL MIXED USE (CMU); FUTURE LAND USE: MIXED USE COMMERCIAL/ PID: 0376-12-0001 AND PID: 0376-12-0002.
5. **PROPOSED LOT/TRACT AREAS:**
   A. TOTAL SITE AREA = 50.68 AC.
   B. ZONING ADMINISTRATOR MAY ADMINISTRATIVELY APPROVE THE RELOCATION OF LOT LINES, SUBJECT TO NO ADDITIONAL LOTS BEING CREATED.
   C. STORMWATER TREATMENT AND ATTENUATION FOR THIS SITE ARE PERMITTED AND ACCOUNTED FOR IN THE TOSCANA ISLES DEVELOPMENT.
6. **FLOOD ZONE:**
   THE SITE LIES WITHIN THE BOUNDARY OF FLOOD ZONE X PER FIRM MAP 12115C0244F REVISED NOVEMBER 4, 2016.
7. **UTILITY PROVIDERS:**

WATER / SANITARY SEWER:	ELECTRICITY	TELEPHONE / CATV	TELEPHONE / CATV
CITY OF VENICE	FLORIDA POWER & LIGHT	FRONTIER	COMCAST
200 WARFIELD AVE	5676 S. McINTOSH RD.	1659 U.S. 41 BYPASS SOUTH	5205 FRUITVILLE ROAD
VENICE, FL 34285	SARASOTA, FL 34233	VENICE, FL 34293	SARASOTA, FLORIDA 34240
(941)480-3333	(941)927-4218	(941)906-6719	(941) 371-6700
(941)486-2084 fax		(941)952-5793 fax	

8. **CITY OF VENICE REQUIRED NOTES:**
   A. ALL WORK CONDUCTED IN THE CITY OF VENICE RIGHT-OF-WAY (ROW) WILL REQUIRE ISSUANCE OF A ROW PERMIT.
   B. ALL WORK CONDUCTED IN SARASOTA COUNTY AND/OR FDOT ROW SHALL REQUIRE A COPY OF THE ISSUED PERMITS.
   C. TREE REMOVAL PERMIT MUST BE OBTAINED FROM SARASOTA COUNTY NATURAL RESOURCES DEPARTMENT.
   D. POST DEVELOPMENT RUNOFF DOES NOT EXCEED PRE-DEVELOPMENT RUNOFF VOLUME OR RATE FOR A 24-HOUR, 25-YEAR STORM EVENT.
   E. ALL FIRE SERVICE BACKFLOW ASSEMBLIES SHALL BE INSTALLED BY A CERTIFIED CONTRACTOR WITH A CLASS 1, 11 OR V CERTIFICATE OF COMPETENCY ISSUED BY THE STATE FIRE MARSHALL AS PER F.S. 633.521.
   F. CONSTRUCTION SITE MUST BE POSTED WITH 24-HOUR CONTACT INFORMATION.
   G. ALL UTILITIES, WHETHER PUBLIC OR PRIVATE, SHALL MEET CITY OF VENICE STANDARDS.
   H. CONTACT PUBLIC WORKS SOLID WASTE DIVISION (941-486-2422) FOR APPROVAL OF DUMPSTER LOCATION AND LAYOUT PRIOR TO CONSTRUCTION.
9. **VERTICAL DATUM:**
   ELEVATIONS ARE RELATIVE TO NATIONAL GEODETIC VERTICAL DATUM (N.G.V.D.) OF 1929. ELEVATIONS ARE BASED ON SARASOTA COUNTY BENCHMARK #378A WITH A PUBLISHED ELEVATION = 40.737'.
10. **SINAGE TRACT:**
    TRACT 100 (SIGNAGE TRACT) IS A NON-HABITABLE STRUCTURE SIGNAGE TRACT.
11. **SIDEWALK:**
    A. A SIDEWALK AND PATHWAY SYSTEM SHALL BE INCLUDED WITHIN THE DEVELOPMENT TO IMPLEMENT THE PROVISIONS OF POLICY 16.22 OF THE FUTURE LAND USE ELEMENT OF THE COMPREHENSIVE PLAN. SIDEWALKS AND PATHWAYS SHALL BE A MINIMUM OF FIVE (5) FT IN WIDTH ALONG ALL ROADWAYS ADJOINTING RESIDENTIAL AND COMMERCIAL USES. WHERE NO USE IS PROPOSED, THE SIDEWALK AND PATHWAY MAY CONTINUE ALONG ONLY THE SIDE WITH ACTIVE USES.
    B. UPON THE COMPLETION OF CONSTRUCTION OF EACH LOT, SAID LOT WILL HAVE ACCESS TO SIDEWALKS.
12. **UTILITY NOTES:**
    A. SANITARY SEWER CONSTRUCTION SHALL BE IN ACCORDANCE WITH THE CITY OF VENICE STANDARDS.
    B. WATER DISTRIBUTION CONSTRUCTION SHALL BE IN ACCORDANCE WITH THE CITY OF VENICE UTILITY CODE.
    C. THE CONTRACTOR SHALL CONTACT "SUNSHINE STATE" ONE CALL, FPL AND ALL OTHER UTILITY COMPANIES PRIOR TO ANY WORK ONSITE OR OFFSITE SO THAT THE EXACT LOCATION OF ALL UTILITIES CAN BE DETERMINED.
    D. TO THE BEST OF OUR KNOWLEDGE THERE ARE NO WELLS LOCATED ON THIS SITE.
    E. ANY WELLS DISCOVERED DURING EARTH MOVING, EXCAVATION OR CONSTRUCTION MUST BE REPORTED TO THE ENVIRONMENTAL ENGINEERING DEPARTMENT WITHIN 24 HOURS OF DISCOVERY. IF SAID WELL HAS NO USE IT SHALL BE PLUGGED BY A LICENSED WELL DRILLING CONTRACTOR IN AN APPROVED MANNER.
    F. TO THE BEST OF OUR KNOWLEDGE NO SEPTIC TANKS ARE LOCATED ON THIS SITE.
    G. ALL UTILITIES INCLUDING TELEPHONE, TELEVISION CABLE AND ELECTRICAL SYSTEMS SHALL BE INSTALLED UNDERGROUND.
    H. ALL IMPROVEMENTS SHALL BE CONSTRUCTED IN ACCORDANCE WITH THE LATEST VERSION OF THE CITY OF VENICE STANDARDS DETAILS.
13. **LANDSCAPE BUFFERING:**
    LANDSCAPE BUFFERING ALONG LAUREL ROAD AND KNIGHTS TRAIL ROAD SHALL BE DESIGNED AT THE TIME OF SITE AND DEVELOPMENT APPROVAL FOR THE INDIVIDUAL LOTS. LANDSCAPE BUFFERING SHALL BE REQUIRED TO MEET THE MINIMUM STANDARDS OF THE PORTOFINO CMU ZONING REQUIREMENTS.

OWNERS:
LAUREL ROAD DEVELOPMENT, LLC
7350 POINT OF ROCKS RD,
SARASOTA, FL 34242

TRI OF TREVISO GRAND, LLC
1600 N. ATLANTIC AVENUE
SUITE 201
COCOA BEACH, FL 32931

ENGINEER / SURVEYOR:
AM ENGINEERING, LLC
8340 CONSUMER COURT
SARASOTA, FLORIDA 34240
(941) 377-9178
CERTIFICATE OF AUTHORIZATION No. 33105, LB No. 4334

INDEX TO DRAWINGS

DWG. NO.	DESCRIPTION
01	COVER
02	AERIAL & EXISTING CONDITIONS PLAN
03	MASTER SITE PLAN
04	PRELIMINARY PLAT
05	STORMWATER MANAGEMENT PLAN
06	PAVING, GRADING & DRAINAGE DETAILS
07	MASTER UTILITY PLAN
08	WATER AND SEWER DETAILS

AM ENGINEERING, LLC

REVISION INDEX

BY:	DATE:	REV. # DESCRIPTION:
MSL	12/31/19	1 RESPOND TO CITY COMMENTS
MSL	03/04/20	2 RESPOND TO CITY COMMENTS

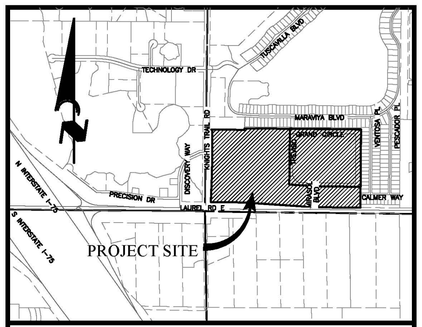

LOCATION MAP

LATITUDE: N27°14'28" LONGITUDE: W 82°40'09"

LEGAL DESCRIPTION

LOT 1, LAUREL ROAD PROPERTY, AS PER PLAT THEREOF RECORDED IN PLAT BOOK 48, PAGES 37 & 37A, PUBLIC RECORDS OF SARASOTA COUNTY, FLORIDA.

D. SHAWN LEINS, P.E.
DATE
FLORIDA P.E. No. #41078

Wed, 04 Mar 2020 - 11:08am K:\active\VANIZO02X\design\active\Laurel\Preliminary Plat\VANIZO2-01-COR.dwg

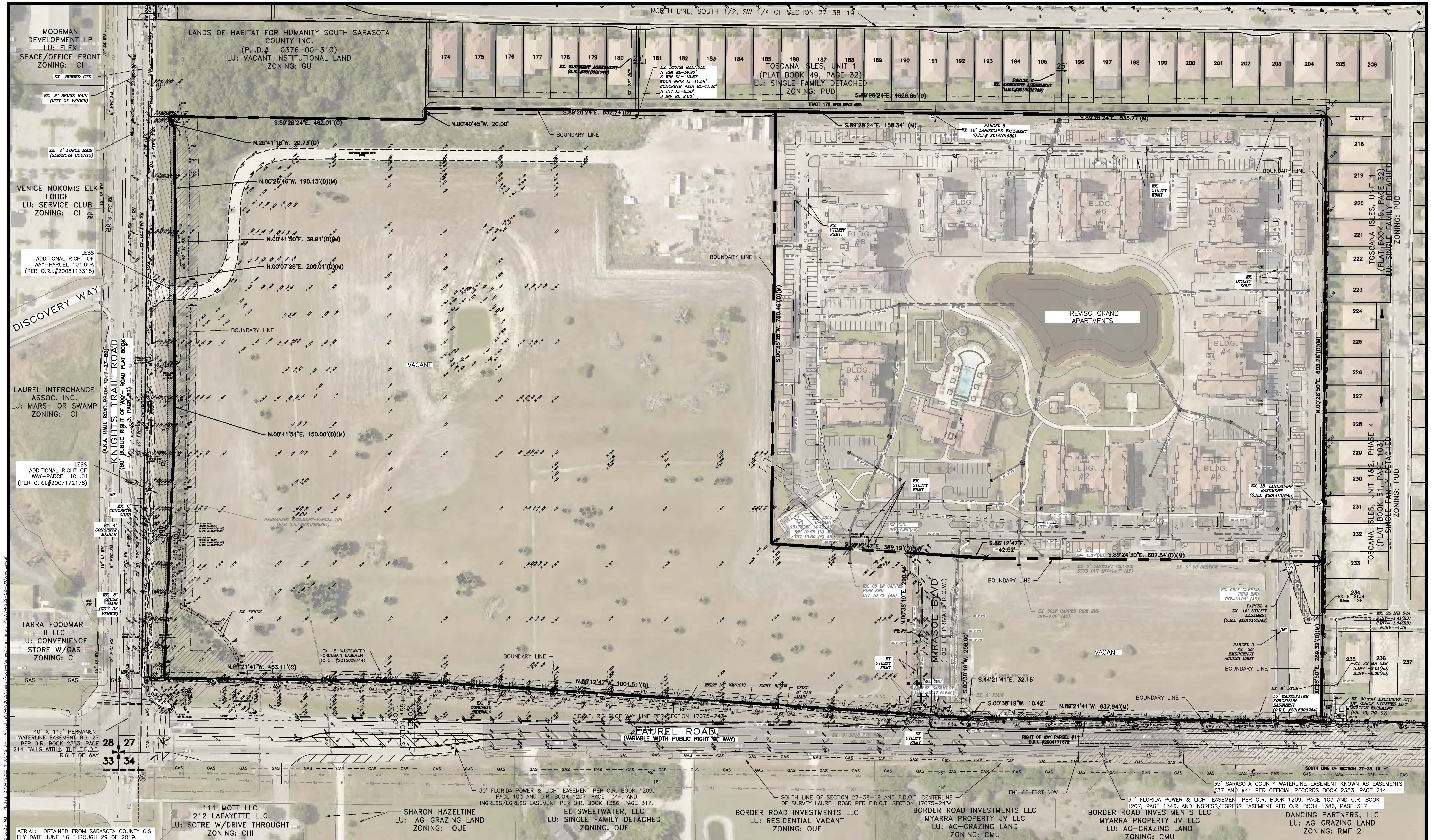

REV. No.	REV. DATE	REVISION DESCRIPTION	BY	REV. No.	REV. DATE	REVISION DESCRIPTION	BY
				MSL	12/31/19	1 RESPOND TO CITY COMMENTS	

CALL BEFORE YOU DIG!
"SUNSHINE STATE ONE-CALL CENTER"
1-800-432-4770
THE CONTRACTOR SHALL NOTIFY "SUNSHINE STATE ONE-CALL CENTER" AND ALL OTHER UTILITIES FOR LOCATION OF EXISTING FACILITIES PRIOR TO BEGINNING CONSTRUCTION.

ISSUE DATE: 11-08-19 ISSUED BY: MSL

ISSUE DESCRIPTION: PRELIMINARY PLAT

AM ENGINEERING, LLC.
Civil Engineering | Land Surveying
8340 Consumer Court Sarasota, FL 34240
Phone: (941) 377-9178 | www.amengfl.com
CA #33105 | LB #4334

0 40 80 160
SCALE IN FEET

CLIENT: LAUREL ROAD DEVELOPMENT, LLC

PROJECT: PORTOFINO CMU (AKA MIRASOL CMU)

TITLE: AERIAL & EXISTING CONDITIONS PLAN

HORIZONTAL SCALE: 1" = 80'
VERTICAL SCALE: N/A
VERTICAL DATUM: NGVD29
PROJECT NUMBER: VANG0032
SHEET NUMBER: 02

PROJECT ENGINEER:
D. SHAWN LEINS, PE
DATE
FLORIDA P.E. No. 41078

©AM Engineering 2020 Saved: 3/4/2020 10:56:35 AM | Plotted: 3/04/2020 11:00:12 AM | V:\active\VANG0032\design\active\sheet\Preliminary Plat\VANG32-02-EXC.dwg|Layout

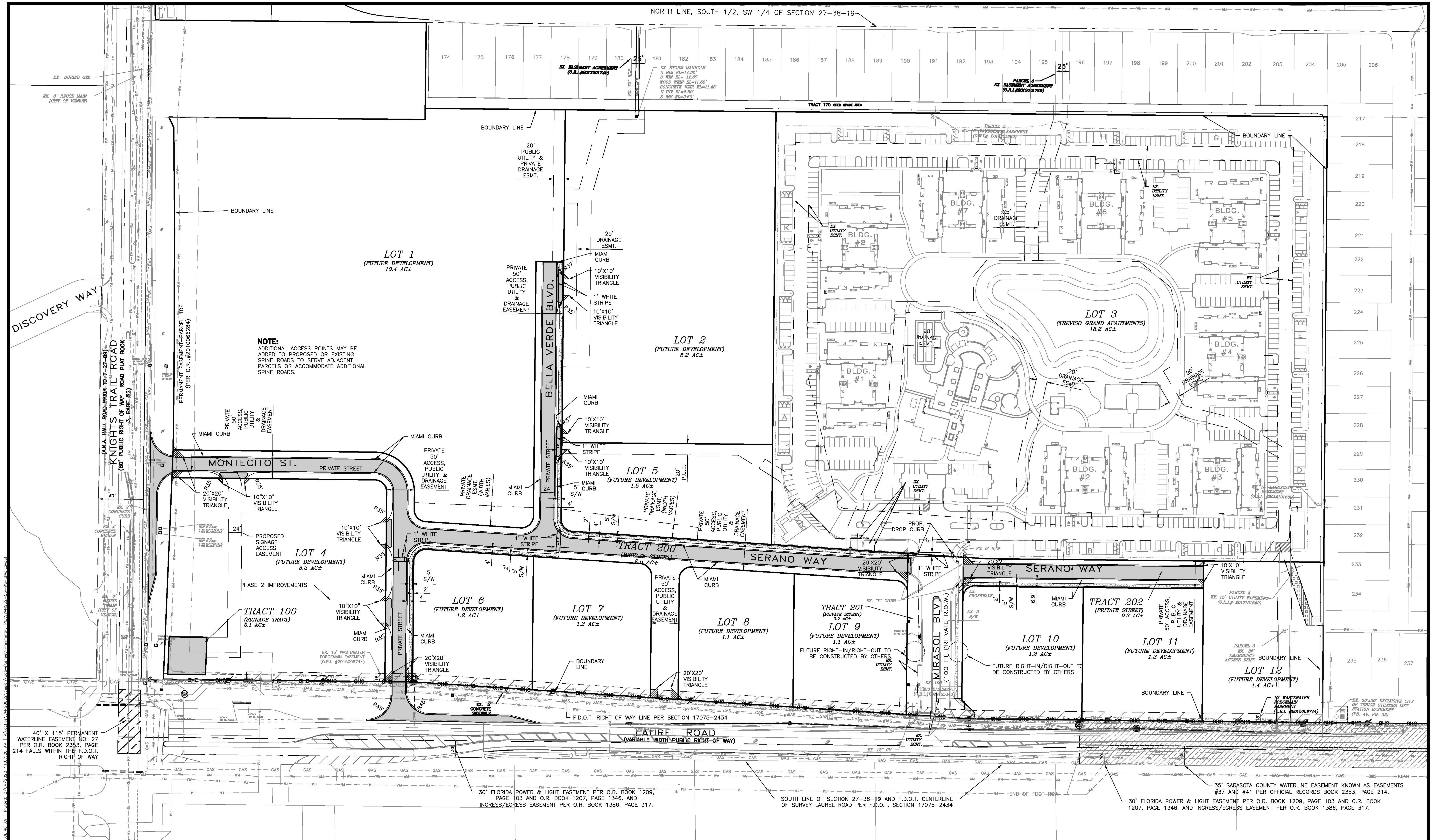

△REV. No.	REV. DATE	REVISION DESCRIPTION	BY
MSL	03/04/20	△2 RESPOND TO CITY COMMENTS	
MSL	12/31/19	△1 RESPOND TO CITY COMMENTS	

CALL BEFORE YOU DIG!
"SUNSHINE STATE ONE-CALL CENTER"
1-800-432-4770
THE CONTRACTOR SHALL NOTIFY "SUNSHINE STATE ONE-CALL CENTER" AND ALL OTHER UTILITIES FOR LOCATION OF EXISTING FACILITIES PRIOR TO BEGINNING CONSTRUCTION.

ISSUE DATE: 11-08-19 ISSUED BY: MSL

ISSUE DESCRIPTION: PRELIMINARY PLAT

AM ENGINEERING, LLC.
Civil Engineering | Land Surveying
8340 Consumer Court Sarasota, FL 34240
Phone: (941) 377-9178 | www.amengfl.com
CA #33105 | LB #4334

0 40 80 160
SCALE IN FEET

CLIENT: LAUREL ROAD DEVELOPMENT, LLC
PROJECT: PORTOFINO CMU (AKA MIRASOL CMU)
TITLE: MASTER SITE PLAN

HORIZONTAL SCALE: 1" = 80'
VERTICAL SCALE: N/A
VERTICAL DATUM: NGVD29
PROJECT NUMBER: VANG0032
SHEET NUMBER: 03

PROJECT ENGINEER:
D. SHAWN LEINS, PE
DATE
FLORIDA P.E. No. 41078

BCLAYBROOKE
©AM Engineering 2020 Saved: 3/4/2020 11:06:48 AM | Plotted: 3/04/2020 11:07:26 AM | V:\active\VANG0032\design\active\sheet\Preliminary Plat\VANG32-03-MSP.dwg|Layout

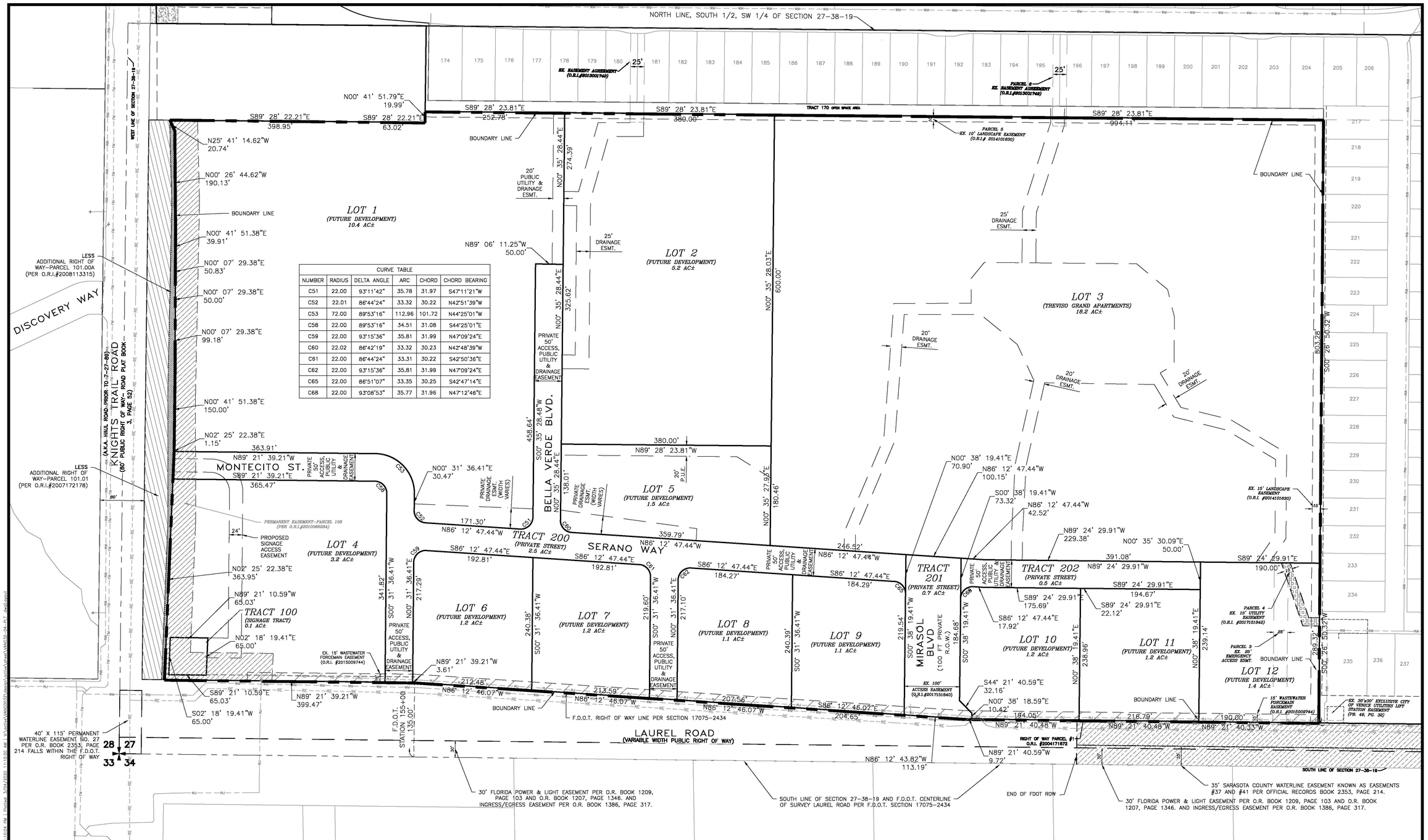

CURVE TABLE					
NUMBER	RADIUS	DELTA ANGLE	ARC	CHORD	CHORD BEARING
C51	22.00	93°11'42"	35.78	31.97	S47°11'21"W
C52	22.01	86°44'24"	33.32	30.22	N42°51'39"W
C53	72.00	89°53'16"	112.96	101.72	N44°25'01"W
C58	22.00	89°53'16"	34.51	31.08	S44°25'01"E
C59	22.00	93°15'36"	35.81	31.99	N47°09'24"E
C60	22.02	86°42'19"	33.32	30.23	N42°48'39"W
C61	22.00	86°44'24"	33.31	30.22	S42°50'36"E
C62	22.00	93°15'36"	35.81	31.99	N47°09'24"E
C65	22.00	86°51'07"	33.35	30.25	S42°47'14"E
C68	22.00	93°08'53"	35.77	31.96	N47°12'46"E

REV. No.	REV. DATE	REVISION DESCRIPTION	BY
MSL	12/31/19	△ RESPOND TO CITY COMMENTS	

CALL BEFORE YOU DIG!
"SUNSHINE STATE ONE-CALL CENTER"
1-800-432-4770
THE CONTRACTOR SHALL NOTIFY "SUNSHINE STATE ONE-CALL CENTER" AND ALL OTHER UTILITIES FOR LOCATION OF EXISTING FACILITIES PRIOR TO BEGINNING CONSTRUCTION.

ISSUE DATE: 11-08-19 | DESIGN BY: MSL

ISSUE DESCRIPTION: PRELIMINARY PLAT

AMENGINEERING, LLC.
Civil Engineering | Land Surveying
8340 Consumer Court Sarasota, FL 34240
Phone: (941) 377-9178 | www.amengfl.com
CA #33105 | LB #4334

CLIENT: LAUREL ROAD DEVELOPMENT, LLC

PROJECT: PORTOFINO CMU (AKA MIRASOL CMU)

TITLE: PRELIMINARY PLAT

HORIZONTAL SCALE: 1" = 80'
VERTICAL SCALE: N/A
VERTICAL DATUM: NGVD29
PROJECT NUMBER: VANG0032
SHEET NUMBER: 04

PROJECT ENGINEER: D. SHAWN LEINS, PE
DATE
FLORIDA P.E. No. 41078

MLDOWN ©AM Engineering 2020 Scale: 1" = 80' Plotted: 3/04/2020 11:10:04 AM | M:\Vistas\VANG0032\dwgs\Vistas\VANG032-24.dwg

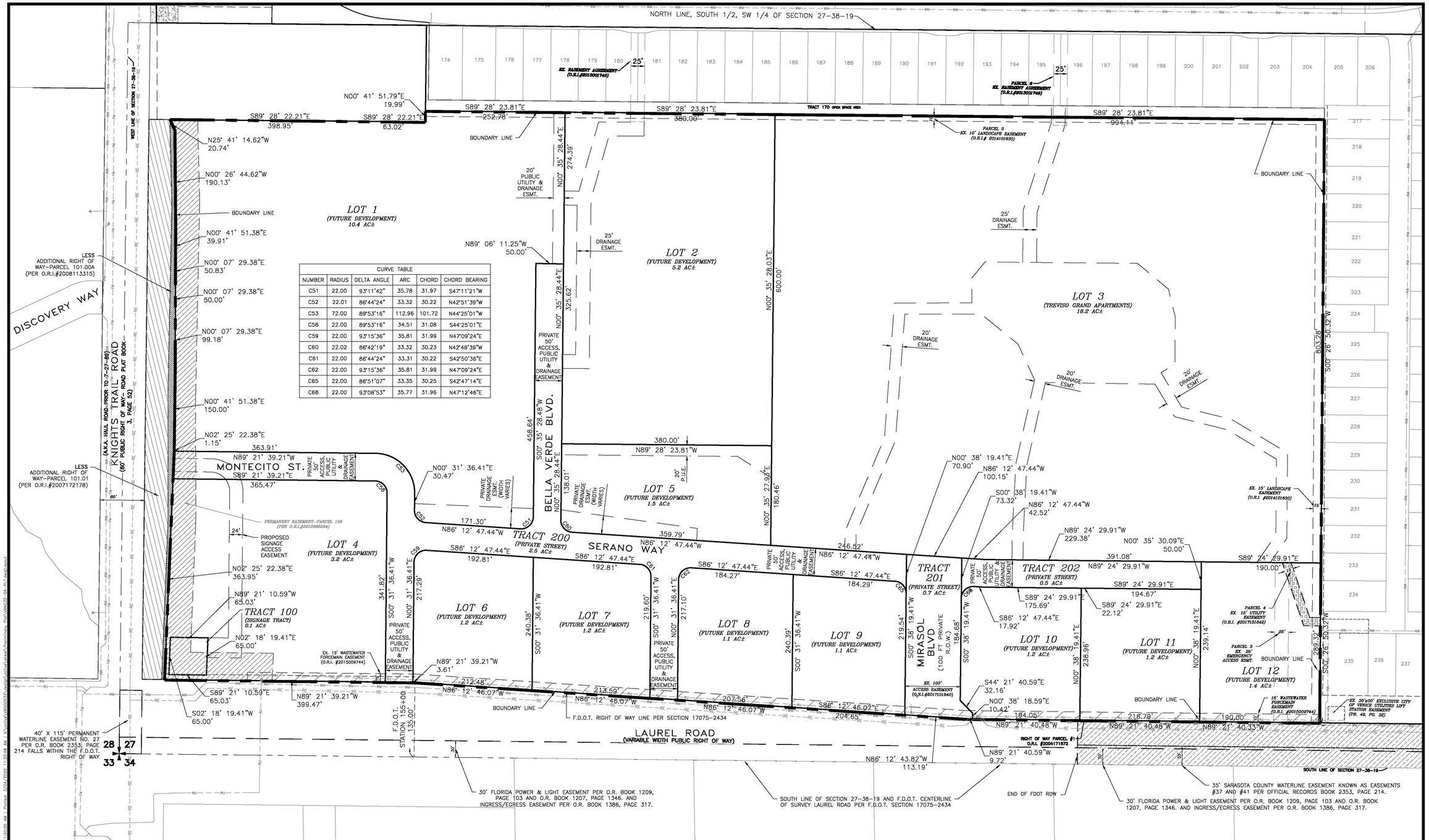

CURVE TABLE					
NUMBER	RADIUS	DELTA ANGLE	ARC	CHORD	CHORD BEARING
C51	22.00	93°11'42"	35.78	31.97	S47°11'21"W
C52	22.01	86°44'24"	33.32	30.22	N42°51'39"W
C53	72.00	89°53'16"	112.96	101.72	N44°25'01"W
C58	22.00	89°53'16"	34.51	31.08	S44°25'01"E
C59	22.00	93°15'36"	35.81	31.99	N47°09'24"E
C60	22.02	86°42'19"	33.32	30.23	N42°48'39"W
C61	22.00	86°44'24"	33.31	30.22	S42°50'36"E
C62	22.00	93°15'36"	35.81	31.99	N47°09'24"E
C65	22.00	86°51'07"	33.35	30.25	S42°47'14"E
C68	22.00	93°08'53"	35.77	31.96	N47°12'46"E

REV. No.	REV. DATE	REVISION DESCRIPTION	BY
	MSL	12/31/19	RESPOND TO CITY COMMENTS

CALL BEFORE YOU DIG!
"SUNSHINE STATE ONE-CALL CENTER"
1-800-432-4770
THE CONTRACTOR SHALL NOTIFY "SUNSHINE STATE ONE-CALL CENTER" AND ALL OTHER UTILITIES FOR LOCATION OF EXISTING FACILITIES PRIOR TO BEGINNING CONSTRUCTION.

ISSUE DATE: 11-08-19 | DESIGN BY: MSL

ISSUE DESCRIPTION: PRELIMINARY PLAT

AMENGINEERING, LLC.
Civil Engineering | Land Surveying
8340 Consumer Court Sarasota, FL 34240
Phone: (941) 377-9178 | www.amengfl.com
CA #33105 | LB #4334

0 40 80 160
SCALE IN FEET

CLIENT: LAUREL ROAD DEVELOPMENT, LLC
PROJECT: PORTOFINO CMU (AKA MIRASOL CMU)
TITLE: PRELIMINARY PLAT

HORIZONTAL SCALE: 1" = 80'
VERTICAL SCALE: N/A
VERTICAL DATUM: NGVD29
PROJECT NUMBER: VANG0032
SHEET NUMBER: 04

PROJECT ENGINEER:
D. SHAWN LEINS, PE
DATE
FLORIDA P.E. No. 41078

BOLAYBROOKE
©AM Engineering 2020 Scale: 1"=80' 12/30/20 11:20:48 AM By: Victor VANG0032\Design\Civil\Plats\Preliminary Plat\VANG32-04-01-Final.dwg

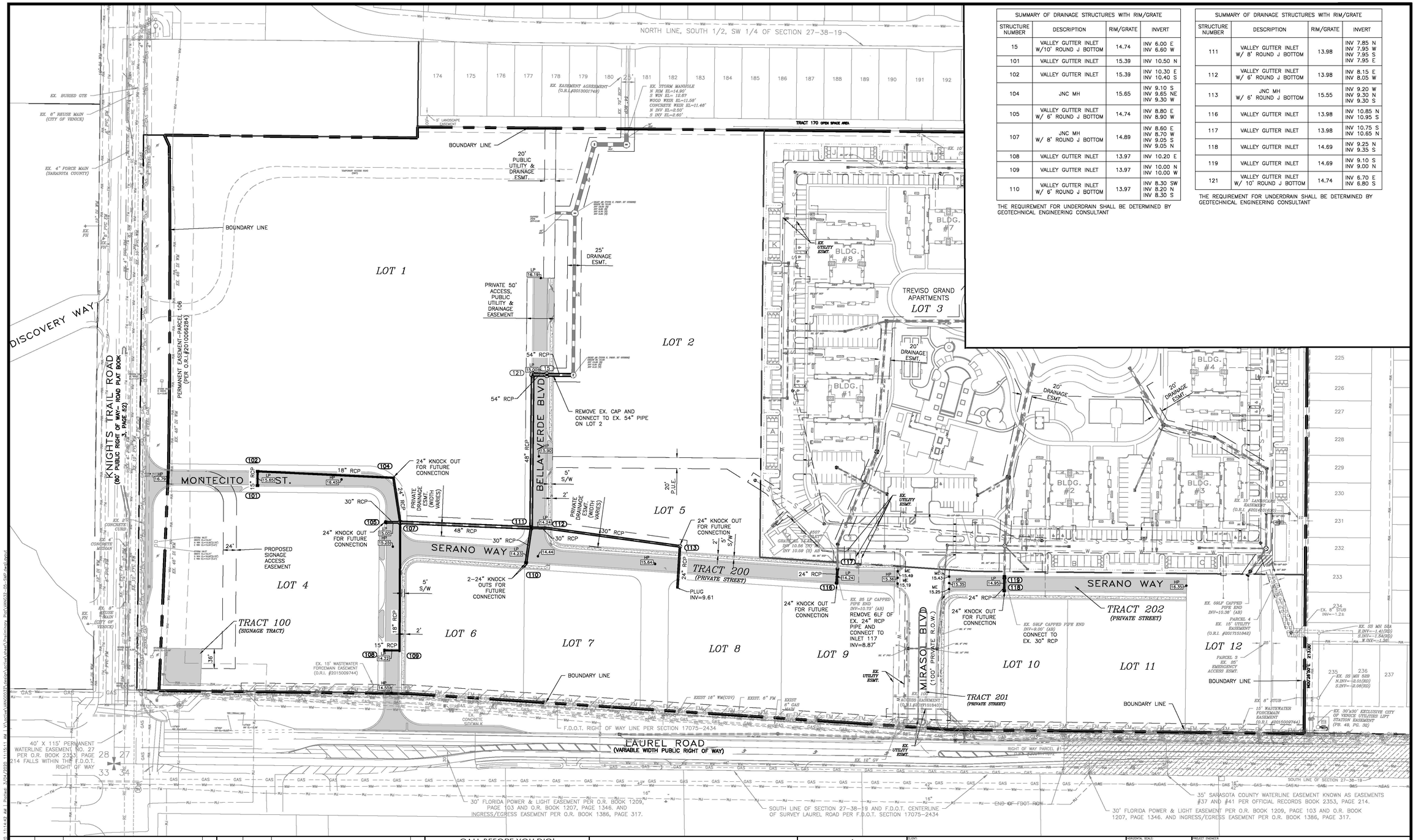

SUMMARY OF DRAINAGE STRUCTURES WITH RIM/GRATE			
STRUCTURE NUMBER	DESCRIPTION	RIM/GRATE	INVERT
15	VALLEY GUTTER INLET W/10' ROUND J BOTTOM	14.74	INV 6.00 E INV 6.60 W
101	VALLEY GUTTER INLET	15.39	INV 10.50 N
102	VALLEY GUTTER INLET	15.39	INV 10.30 E INV 10.40 S
104	JNC MH	15.65	INV 9.10 S INV 9.65 NE INV 9.30 W
105	VALLEY GUTTER INLET W/ 6' ROUND J BOTTOM	14.74	INV 8.80 E INV 8.90 W
107	JNC MH W/ 8' ROUND J BOTTOM	14.89	INV 8.60 E INV 8.70 W INV 9.05 S INV 9.05 N
108	VALLEY GUTTER INLET	13.97	INV 10.20 E
109	VALLEY GUTTER INLET	13.97	INV 10.00 N INV 10.00 W
110	VALLEY GUTTER INLET W/ 6' ROUND J BOTTOM	13.97	INV 8.30 SW INV 8.20 N INV 8.30 S

THE REQUIREMENT FOR UNDERDRAIN SHALL BE DETERMINED BY GEOTECHNICAL ENGINEERING CONSULTANT

SUMMARY OF DRAINAGE STRUCTURES WITH RIM/GRATE			
STRUCTURE NUMBER	DESCRIPTION	RIM/GRATE	INVERT
111	VALLEY GUTTER INLET W/ 8' ROUND J BOTTOM	13.98	INV 7.85 N INV 7.95 W INV 7.95 S INV 7.95 E
112	VALLEY GUTTER INLET W/ 6' ROUND J BOTTOM	13.98	INV 8.15 E INV 8.05 W
113	JNC MH W/ 6' ROUND J BOTTOM	15.55	INV 9.20 W INV 9.30 N INV 9.30 S
116	VALLEY GUTTER INLET	13.98	INV 10.85 N INV 10.95 S
117	VALLEY GUTTER INLET	13.98	INV 10.75 S INV 10.65 N
118	VALLEY GUTTER INLET	14.69	INV 9.25 N INV 9.35 S
119	VALLEY GUTTER INLET	14.69	INV 9.10 S INV 9.00 N
121	VALLEY GUTTER INLET W/ 10' ROUND J BOTTOM	14.74	INV 6.70 E INV 6.80 S

THE REQUIREMENT FOR UNDERDRAIN SHALL BE DETERMINED BY GEOTECHNICAL ENGINEERING CONSULTANT

CALL BEFORE YOU DIG!
"SUNSHINE STATE ONE-CALL CENTER"
1-800-432-4770
THE CONTRACTOR SHALL NOTIFY "SUNSHINE STATE ONE-CALL CENTER" AND ALL OTHER UTILITIES FOR LOCATION OF EXISTING FACILITIES PRIOR TO BEGINNING CONSTRUCTION.

ISSUE DATE: 11-08-19
DRAWN BY: MSL
ISSUE DESCRIPTION: PRELIMINARY PLAT

REV. No.	REV. DATE	REVISION DESCRIPTION	BY

AMENGINEERING, LLC.
Civil Engineering | Land Surveying
8340 Consumer Court Sarasota, FL 34240
Phone: (941) 377-9178 | www.amengfl.com
CA #33105 | LB #4334

0 40 80 160
SCALE IN FEET

CLIENT: LAUREL ROAD DEVELOPMENT, LLC
PROJECT: PORTOFINO CMU (AKA MIRASOL CMU)
TITLE: STORMWATER MANAGEMENT PLAN

HORIZONTAL SCALE: 1" = 80'
VERTICAL SCALE: N/A
VERTICAL DATUM: NGVD29
PROJECT NUMBER: VANG0032
SHEET NUMBER: 05

PROJECT ENGINEER:
D. SHAWN LEINS, PE
DATE
FLORIDA P.E. No. 41078

BCLAYBROOKE
©AM Engineering 2020

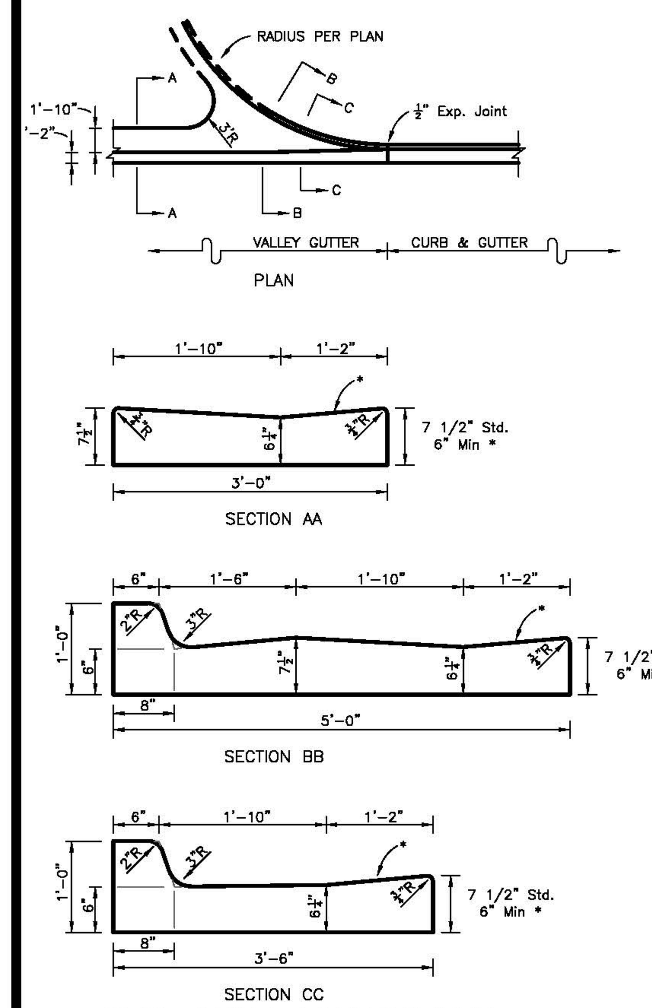

"M" CURB TRANSITION

NTS

* WHEN USED ON HIGH SIDE OF ROADWAYS, THE CROSS SLOPE OF THE GUTTER SHALL MATCH THE CROSS SLOPE OF THE ADJACENT PAVEMENT. THE THICKNESS OF THE LIP SHALL BE 6", UNLESS OTHERWISE SHOWN ON PLANS.

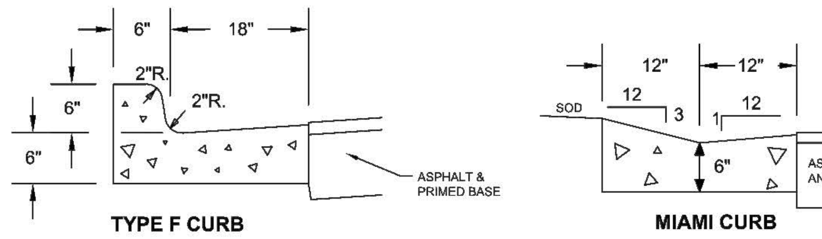

1.) ALL STREETS SHALL HAVE A TWO-FOOT WIDE CONCRETE (3000 PSI AT 28 DAYS WITH FIBER REINFORCEMENT) CURB AND GUTTER, AND MEET OR EXCEED FDOT SPECIFICATIONS UNLESS OTHERWISE APPROVED BY THE CITY ENGINEER.

CURB DETAIL

N.T.S.

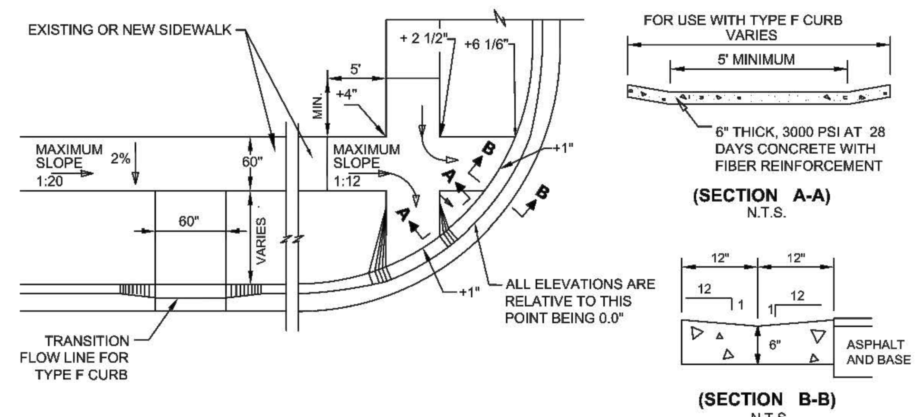

1.) ALL CONCRETE RAMPS SHALL BE 4" THICK, INCREASING TO 6" THICK WITHIN 48" OF THE CURB
2.) ALL CONNECTIONS TO AN EXISTING SIDEWALK SHALL BE AT AN EXPANSION OR CONTRACTION JOINT
3.) THE MAXIMUM RAMP SLOPE SHALL BE 1:12, FOR A VERTICAL DISTANCE OF NOT MORE THAN 6 INCHES.
4.) THE MAXIMUM RUNNING SIDEWALK SLOPE SHALL BE 1:20, AND MAXIMUM CROSS SLOPE SHALL BE 2%.
5.) ALL SIDEWALK RAMPS AND STREET CONNECTIONS WITHIN THE PUBLIC ROW SHALL HAVE A TACTILE SURFACE.
6.) TACTILE SURFACES SHALL MEET THE MOST CURRENT AMERICANS WITH DISABILITIES ACT STANDARDS, BE FDOT COMPLIANT AND SHALL BE BRICK RED IN COLOR.
7.) ALL MATERIALS & METHODS OF CONSTRUCTION SHALL BE IN ACCORDANCE WITH LATEST EDITION OF THE FDOT, "STANDARDS FOR ROAD & BRIDGE CONSTRUCTION". IN ADDITION, CONCRETE SHALL BE 3000 PSI AT 28 DAYS WITH A MAXIMUM 4" SLUMP AND FIBER REINFORCEMENT.

SIDEWALK RAMP DETAIL

N.T.S.

CITY OF VENICE ENGINEERING DEPARTMENT 401 WEST VENICE AVE. VENICE FL 34285 (941) 486-2626 FAX (941) 480-3031	ENGINEERING SIDEWALK RAMPS & CURBING	DATE JAN. 2019 SHEET NO. ENG-1

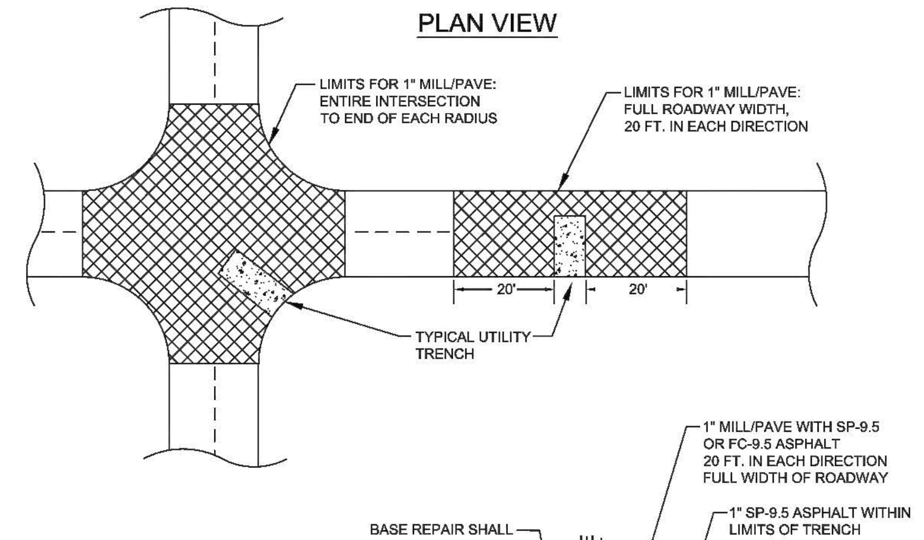

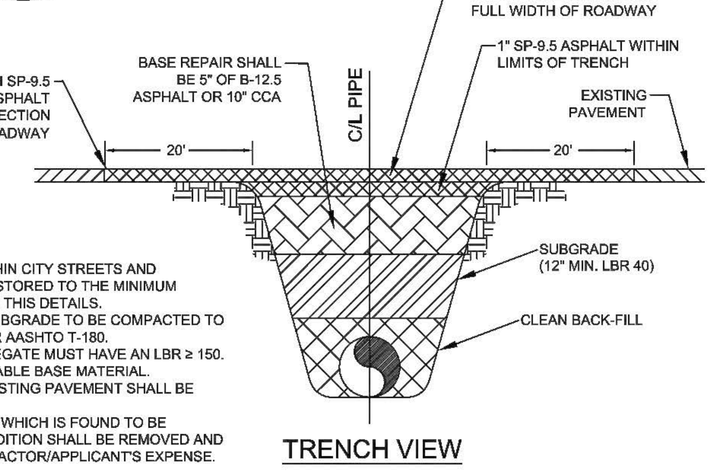

1.) ALL PAVEMENT CUTS WITHIN CITY STREETS AND ALLEYWAYS SHALL BE RESTORED TO THE MINIMUM STANDARDS AS SHOWN IN THIS DETAILS.
2.) TRENCH BACKFILL AND SUBGRADE TO BE COMPACTED TO 98% OF MAX. DENSITY PER AASHTO T-180. CRUSH CONCRETE AGGREGATE MUST HAVE AN LBR ≥ 150. SHELL IS NOT AN ACCEPTABLE BASE MATERIAL.
3.) ALL CONNECTIONS TO EXISTING PAVEMENT SHALL BE STRAIGHT AND FLUSH.
4.) ANY RESTORATION WORK WHICH IS FOUND TO BE UNSATISFACTORY IN CONDITION SHALL BE REMOVED AND REPLACED AT THE CONTRACTOR/APPLICANT'S EXPENSE.

PAVEMENT RESTORATION DETAIL

N.T.S.

CITY OF VENICE ENGINEERING DEPARTMENT 401 WEST VENICE AVE. VENICE FL 34285 (941) 486-2626 FAX (941) 480-3031	ENGINEERING PAVEMENT RESTORATION	DATE JAN. 2019 SHEET NO. ENG-2

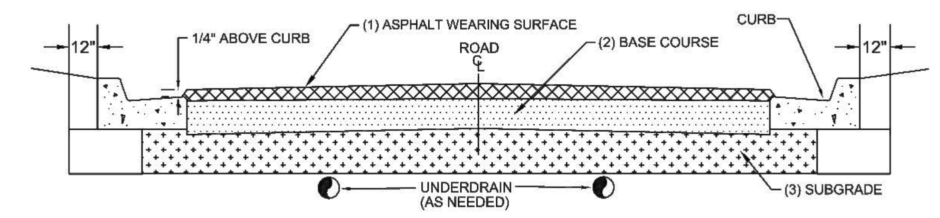

ROADWAY SECTION DESIGN (MINIMUM THICKNESS)

STREET CLASSIFICATION	(1) ASPHALT SURFACE:	(2) BASE: B-12.5	CTB	CCA	(3) SUB-GRADE: TYPE B STAB.
RESIDENTIAL STREET (PRIVATE) & LIGHT DUTY PARKING	2" TYPE SP-9.5 (INSTALLED AS TWO 1" LIFTS)	4"	8"	8"	8" MIN 40 LBR
RESIDENTIAL STREET (PUBLIC)	2" TYPE SP-9.5 (INSTALLED AS TWO 1" LIFTS)	5"	10"	10"	12" MIN 40 LBR
INDUSTRIAL STREET (PUBLIC/PRIVATE)	2" TYPE SP-12.5 & 1" TYPE FC-9.5	5"	10"	10"	12" MIN 40 LBR
COLLECTOR / ARTERIAL STREET	3" TYPE SP-12.5 & 1" TYPE FC-9.5	5"	10"	10"	12" MIN 40 LBR

1.) ALL STREETS WITHIN THE CITY LIMITS SHALL MEET THE MINIMUM DESIGN STANDARDS AS ESTABLISHED IN THIS DETAIL.
2.) ALL INSTALLATION METHODS AND MATERIALS SHALL CONFORM WITH THE LATEST EDITION OF THE FDOT STANDARD SPECIFICATIONS FOR ROAD AND BRIDGE CONSTRUCTION.
3.) CRUSHED CONCRETE AGGREGATE (CCA) MUST HAVE AN LBR ≥150. SHELL IS NOT AN ACCEPTABLE BASE MATERIAL.
4.) CEMENT TREATED BASE:
a.) THE MATERIAL TO BE USED AS THE FILLER AGGREGATE IN CTB MUST BE LBR TESTED PRIOR TO DESIGN FORMULATION (ADDING CEMENT). THIS MATERIAL MUST ACHIEVE AN LBR VALUE OF ≥ 100.
b.) CTB DESIGN CRITERION SHOULD TARGET RANGE FROM 175 TO 275 PSI ON 7 DAY BREAK. TESTING MUST BE PROVIDED TO VERIFY THE COMPRESSIVE STRENGTH OF THE MIX.
5.) ALL GRANULAR COURSES OF ROAD CONSTRUCTION MUST BE COMPACTED TO 98% OF ITS OPTIMUM DENSITY AS PER T-180 (AASHTO). CTB SHALL BE COMPACTED TO 98% OF ITS LAB FORMULATION DENSITY (AASHTO T-99).
6.) ALL MINERAL MATERIALS USED IN CONSTRUCTION OF ROADWAYS MUST MEET THE FOLLOWING CRITERIA:
a.) FINES (PASSING # 200 SIEVE) MUST BE LIMITED TO ≤ 12%, ORGANICS LIMITED TO ≤ 5%, NO DELETERIOUS MATERIALS.
7.) SIGNAGE AND PAVEMENT MARKINGS SHALL BE IN ACCORDANCE WITH LATEST EDITION OF THE FDOT ROADWAY AND TRAFFIC DESIGN STANDARDS AND THE MANUAL ON UNIFORM TRAFFIC CONTROL DEVICES (MUTCD MANUAL).
8.) ALL CITY STREET SIGNS WILL BE BLUE BACKGROUND WITH 6" WHITE LETTERS AND CONSTRUCTED WITH HIGH INTENSITY REFLECTORIZED MATERIAL. ALL STREET SIGNS SHALL BE 9 INCHES WIDE AND APPROVED BY THE DIRECTOR OF PUBLIC WORKS PRIOR TO INSTALLATION.
9.) ALL CURB PADS SHALL MEET THE SAME STRUCTURAL AND COMPACTION STANDARDS AS ROAD SUB GRADE. THESE PADS WILL EXTEND TO AT LEAST 12" BEYOND THE CURB.
10.) UNDERDRAINS OR SIDEDRAINS MAY BE INCLUDED WHEN THE GROUND WATER LEVELS MAY AFFECT THE STRUCTURAL INTEGRITY OF THE ROAD. THIS DESIGN SHALL BE THE RESPONSIBILITY OF ENGINEER OF RECORD.
11.) ANY PROPOSED TRAFFIC CALMING DEVICES MUST BE APPROVED BY THE CITY ENGINEER & FIRE CHIEF.
12.) ASPHALT COURSES AND CONCRETE SHALL NOT BE PLACED WHILE RAIN IS FALLING, OR WHEN THERE IS STANDING WATER ON THE SURFACE TO BE COVERED.
13.) TACK COAT SHALL BE APPLIED BETWEEN ALL ASPHALT LAYERS.

TYPICAL ROADWAY SECTION

N.T.S.

CITY OF VENICE ENGINEERING DEPARTMENT 401 WEST VENICE AVE. VENICE FL 34285 (941) 486-2626 FAX (941) 480-3031	ENGINEERING TYPICAL ROADWAY SECTION	DATE JAN. 2019 SHEET NO. ENG-3

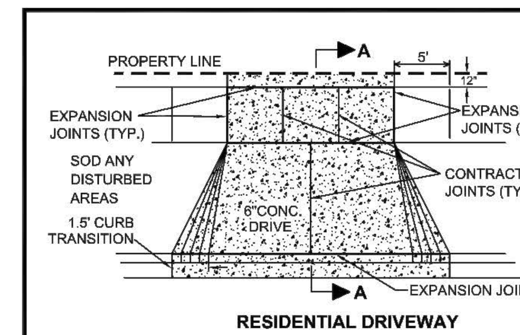

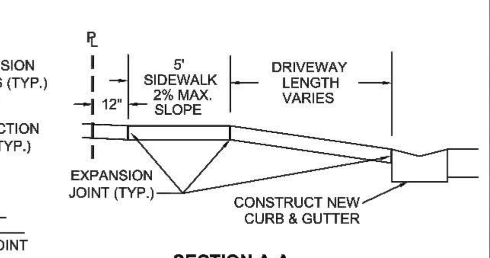

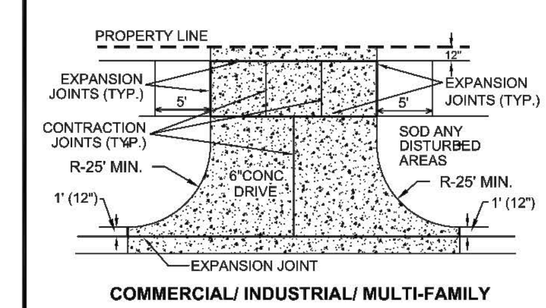

1.) SIDEWALKS AND DRIVEWAYS SHALL BE CONSTRUCTED OF 3000 PSI AT 28 DAYS CONCRETE (MAXIMUM 4" SLUMP) WITH FIBER REINFORCEMENT.
2.) ALL SIDEWALKS SHALL BE 5' WIDE AND CONSTRUCTED WITH A MAX. CROSS SLOPE OF 2% AND MAX. RUNNING SLOPE OF 5%.
3.) CONTRACTION SAW-CUTS SHALL BE CONSTRUCTED EVERY 5' LENGTH OF SIDEWALK. EXPANSION JOINTS SHALL BE CONSTRUCTED AT 50' INTERVALS.
4.) 1/2-INCH THICK ASPHALTIC FELT OR "PRESSURE TREATED WOOD" SHALL BE PLACED AT EACH EXPANSION JOINT.
5.) EXISTING CURB AND GUTTER SHALL BE REMOVED ONLY AT EXISTING JOINTS.
6.) DRIVEWAY WIDTH AND LOCATION SHALL COMPLY WITH ZONING CODES, SECTIONS 122-446, 62-64, 62-65.
7.) DRIVEWAY SLOPES SHALL BE IN ACCORDANCE WITH THE LATEST EDITION OF THE FDOT, "ROADWAY AND TRAFFIC DESIGN STANDARDS", INDEX 515.

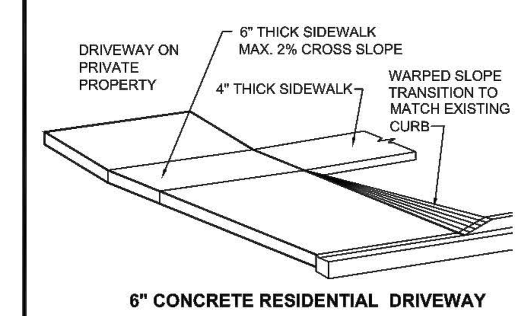

DRIVEWAY & SIDEWALK DETAIL

N.T.S.

CITY OF VENICE ENGINEERING DEPARTMENT 401 WEST VENICE AVE. VENICE FL 34285 (941) 486-2626 FAX (941) 480-3031	ENGINEERING TYPICAL DRIVEWAY & SIDEWALK	DATE JAN. 2019 SHEET NO. ENG-4

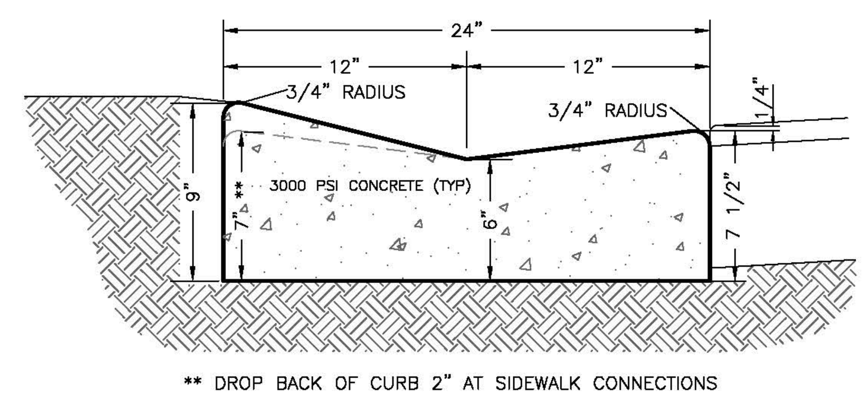

** DROP BACK OF CURB 2" AT SIDEWALK CONNECTIONS

TYPE "M" CURB

ADA TACTILE WARNING: BASIS FOR DESIGN – CONCRETE PAVERS WITH TRUNCATED RAISED PATTERN MANUF. BY PAVERSYSTEMS, AN OLDCASTLE COMPANY. INSTALL PER MANUF. WRITTEN INSTRUCTIONS W/ PERIMETER CURBING. ARCHITECT TO SELECT FROM FULL RANGE OF MANUF. STD. COLORS – TYP.

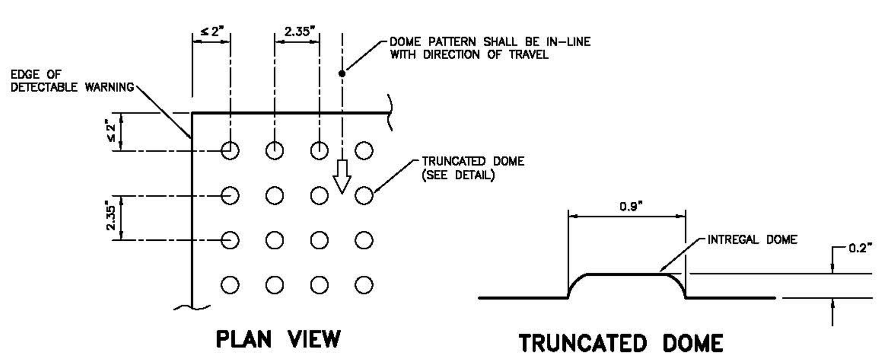

ALL SIDEWALK CURB RAMPS SHALL HAVE DETECTABLE WARNING SURFACES THAT EXTEND THE FULL WIDTH OF THE RAMP AND IN THE DIRECTION OF TRAVEL 24" (610 mm) FROM THE BACK OF CURB.

CURB RAMP DETECTABLE WARNING

NTS

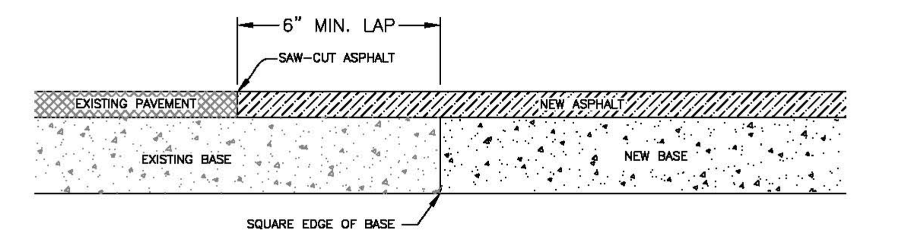

CONNECTION OF EXISTING PAVEMENT TO PROPOSED NEW PAVEMENT

NTS

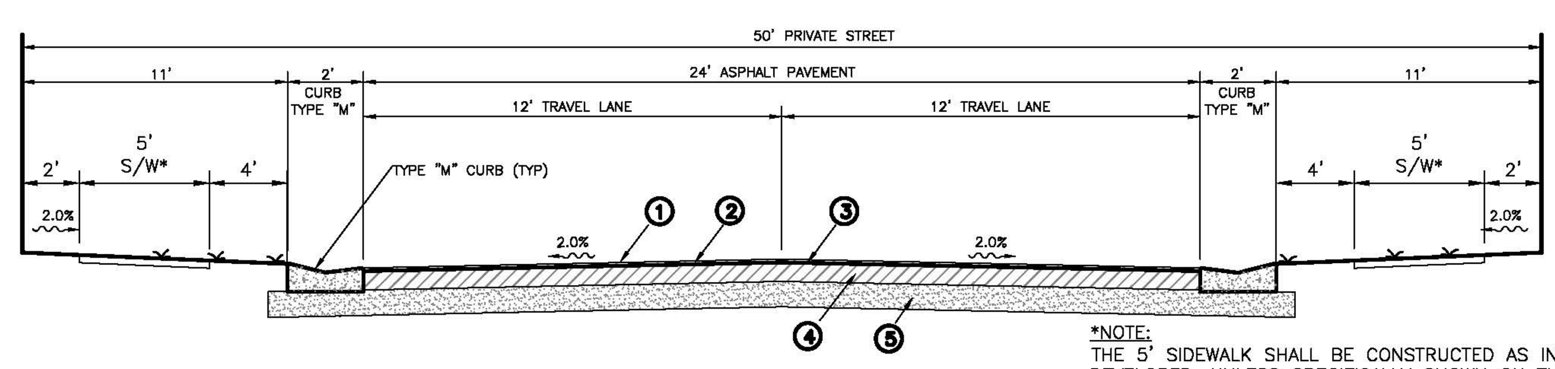

*NOTE:
THE 5' SIDEWALK SHALL BE CONSTRUCTED AS INDIVIDUAL LOTS ARE DEVELOPED, UNLESS SPECIFICALLY SHOWN ON THE PRELIMINARY PLAT. SIDEWALKS MAY BE CONSTRUCTED ON THE INDIVIDUAL LOTS, ADJACENT TO THE RIGHT-OF-WAY.

50' PRIVATE STREET TYPICAL CROSS SECTION

NTS

PAVEMENT NOTES

1. THE ENGINEER OF RECORD HAS DETERMINED THAT THE SUB-BASE, BASE AND SURFACE COURSE COURSE SPECIFIED FOR ON-SITE PAVING IS SATISFACTORY FOR THE USE INTENDED)
2. ALL PAVEMENT MARKINGS, SHALL BE "ALKYD THERMOPLASTIC" 90 MILS IN THICKNESS, EXCEPT FOR STRIPING OF PARKING SPACES WHICH SHALL BE PAINTED.
3. A TWO FOOT WIDE STRIP OF SOD IS TO BE PROVIDED BEHIND ALL CURBS AND PAVEMENT EDGES. SOD OR GRASSING/MULCHING SHALL BE PROVIDED FOR ALL OTHER OPEN AREAS UNLESS NOTED OTHERWISE ON LANDSCAPE PLANS.

① ASPHALTIC CONCRETE STRUCTURAL SURFACE, 1" THICK, TYPE SP-9.5 – LIFT 2

② ASPHALTIC CONCRETE STRUCTURAL SURFACE, 1" THICK, TYPE SP-9.5 – LIFT 1

③ BITUMINOUS PRIME COAT

④ BASE ALTERNATES – 10" THICK CRUSHED CONCRETE (MINIMUM LBR 100) OR 10" CEMENT TREATED BASE

⑤ STABILIZED SUBGRADE – 12" THICK (MINIMUM LBR 40) COMPACTED TO 98% DENSITY, AASHTO T-180, MODIFIED PROCTOR, SUBGRADE SHALL BE FIRM AND UNYIELDING AND CONTAIN NO ORGANIC MATERIAL IN THE TOP 6"

GENERAL NOTES:

ALL SIDEWALKS, CURB, GUTTERS AND INTERSECTIONS SHALL COMPLY WITH THE FLORIDA ACCESSIBILITY CODE.

SIDEWALKS SHALL HAVE A HANDICAP RAMP WITH TACTILE SURFACE AND CURB TRANSITION PER FDOT INDEX #304 AND CITY OF VENICE REQUIREMENTS

SEE CITY OF VENICE DETAIL SHEET #PS-1 FOR SIDEWALK DETAILS

ALL PRIVATELY MAINTAINED ROAD SIGNAGE AND STRIPING SHALL BE CONSISTENT WITH ALL PROVISIONS OF THE MOST RECENT EDITION OF THE MUTCD, INCLUDING SIGN RETROREFLECTIVITY, DESIGN, PLACEMENT AND USE.

FOR ON SITE STRIPING DETAILS PLEASE SEE FDOT INDEX 17346. (CROSSWALK, WHITE STOP BAR, AND ENTRANCE LANE STRIPING)

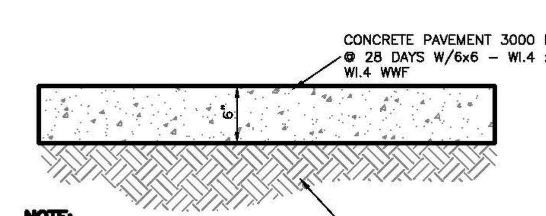

NOTE:
CONTRACTOR TO SUBMIT PLAN SHOWING PROPOSED CONSTRUCTION AND SAWED JOINTS FOR CONCRETE PAVEMENT TO ARCHITECT AND ENGINEER FOR APPROVAL PRIOR TO CONSTRUCTION.

CONCRETE PAVEMENT DETAIL

NTS

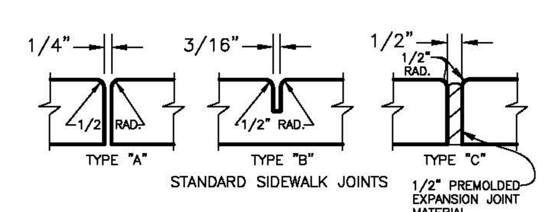

TABLE OF SIDEWALK JOINTS	
TYPE	LOCATION
A	P.C. AND P.T. OF CURVES, JUNCTION OF EXISTING AND NEW SIDEWALKS.
B	5'-0" CENTER TO CENTER ON SIDEWALKS.
C	ANYWHERE SIDEWALK ABUTS CONCRETE CURBS, DRIVEWAYS AND SIMILAR STRUCTURES. CONTINUOUS SIDEWALKS INTERVALS NOT EXCEED 100 FEET.

TABLE OF SIDEWALK THICKNESS	
THICKNESS	LOCATION
4"	RESIDENTIAL AREAS
6"	AT DRIVEWAYS AND OTHER AREAS

SIDEWALK NOTES:
1. INSURE OFFSET FROM PROPERTY LINES MEET WITH THE APPROVED PLAN.
2. THE MINIMUM COMPRESSIVE STRENGTH OF THE CONCRETE SHALL BE 3000 P.S.I. AT 28 DAYS.
3. CONTRACTION JOINT CONSTRUCTION: SECTIONS NOT TO BE LESS THAN 4 FEET OR MORE THAN 10 FEET LONG.
4. EXPANSION MATERIAL TO BE PLACED AT ALL DRIVEWAYS AND SIDEWALK INTERSECTIONS AND WHEN OPERATIONS CEASE FOR ANY CONSIDERABLE TIME. SIDEWALKS SHALL HAVE EXPANSION JOINTS AT A MAXIMUM OF 100 FEET.
5. THE PITCH OF THE SIDEWALK SHALL BE NO MORE THAN ONE QUARTER INCH PER FOOT TOWARDS THE ROAD, OR AS THE APPROVED PLAN SHOWS. THE INCLINE WILL NOT BE GREATER THAN 12:1.
6. SIDE SLOPES ADJACENT TO SIDEWALKS SHALL NOT EXCEED 4:1.
7. SOD SHALL BE PLACED WITHIN THE COUNTY RIGHT-OF-WAY FROM BACK OF CURB TO THE FACE OF THE SIDEWALK.
8. ALL ORGANIC MATERIAL AND DEBRIS SHALL BE REMOVED, AREA GRADED AND COMPACTED PRIOR TO CONCRETE PLACEMENT.

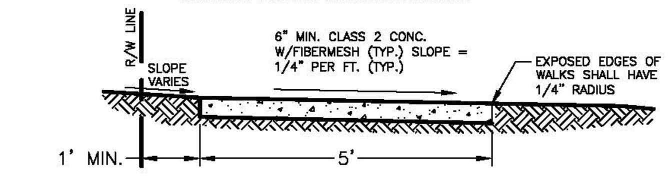

ALL CONCRETE SIDEWALK SHALL HAVE ROCK SALT FINISH

SEE FDOT INDEX #304 FOR SIDEWALK/CURB TRANSITION W/HANDICAP ACCESSIBILITY

STANDARD SIDEWALK DETAIL

NTS

△REV. No.	REV. DATE	REVISION DESCRIPTION	BY	△REV. No.	REV. DATE	REVISION DESCRIPTION	BY
				MSL	12/31/19	△1 RESPOND TO CITY COMMENTS	

CALL BEFORE YOU DIG!
"SUNSHINE STATE ONE-CALL CENTER"
1-800-432-4770
THE CONTRACTOR SHALL NOTIFY "SUNSHINE STATE ONE-CALL CENTER" AND ALL OTHER UTILITIES FOR LOCATION OF EXISTING FACILITIES PRIOR TO BEGINNING CONSTRUCTION.

ISSUE DATE: 11-08-19 ISSUED BY: MSL
ISSUE DESCRIPTION: PRELIMINARY PLAT

AM ENGINEERING, LLC.
Civil Engineering | Land Surveying
8340 Consumer Court Sarasota, FL 34240
Phone: (941) 377-9178 | www.amengfl.com
CA #33105 | LB #4334

CLIENT: LAUREL ROAD DEVELOPMENT, LLC
PROJECT: PORTOFINO CMU (AKA MIRASOL CMU)
TITLE: PAVING, GRADING & DRAINAGE DETAILS

HORIZONTAL SCALE: AS NOTED
VERTICAL SCALE: N/A
VERTICAL DATUM: NGVD29
PROJECT NUMBER: VANG0032
SHEET NUMBER: 06

PROJECT ENGINEER:
D. SHAWN LEINS, PE
DATE
FLORIDA P.E. No. 41078

©AM Engineering 2020 Saved: 3/4/2020 11:24:37 AM | Plotted: 3/04/2020 11:25:25 AM | V:\active\VANG0032\design\active\sheet\Preliminary Plat\VANG32-06-DD1.dwg|Layout

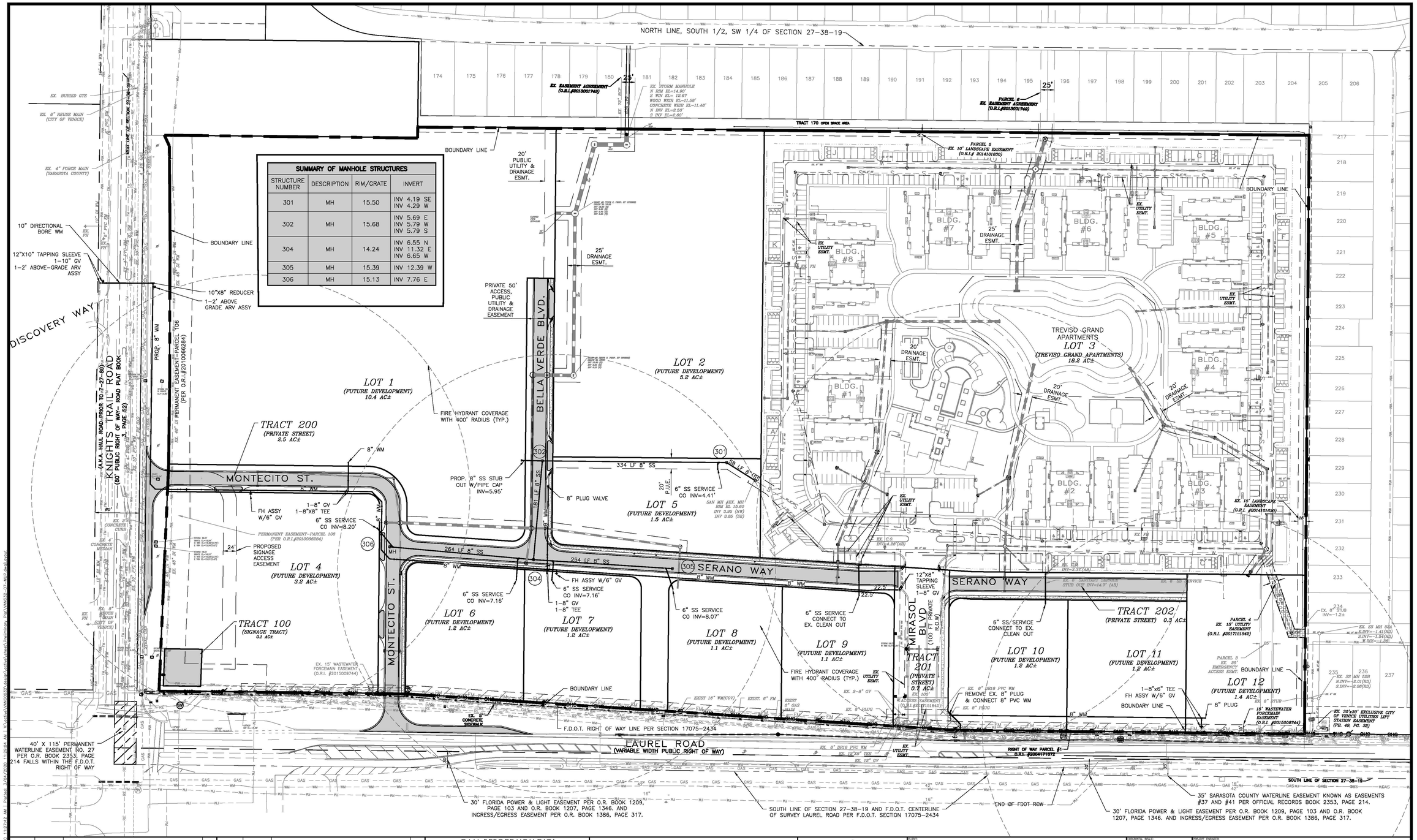

SUMMARY OF MANHOLE STRUCTURES

STRUCTURE NUMBER	DESCRIPTION	RIM/GRATE	INVERT
301	MH	15.50	INV 4.19 SE INV 4.29 W
302	MH	15.68	INV 5.69 E INV 5.79 W INV 5.79 S
304	MH	14.24	INV 6.55 N INV 11.32 E INV 6.65 W
305	MH	15.39	INV 12.39 W
306	MH	15.13	INV 7.76 E

REV. No.	REV. DATE	REVISION DESCRIPTION	BY	REV. No.	REV. DATE	REVISION DESCRIPTION	BY

CALL BEFORE YOU DIG!
"SUNSHINE STATE ONE-CALL CENTER"
1-800-432-4770
THE CONTRACTOR SHALL NOTIFY "SUNSHINE STATE ONE-CALL CENTER" AND ALL OTHER UTILITIES FOR LOCATION OF EXISTING FACILITIES PRIOR TO BEGINNING CONSTRUCTION.

ISSUE DATE: 11-08-19
DRAWN BY: MSL
ISSUE DESCRIPTION: PRELIMINARY PLAT

AMENGINEERING, LLC.
Civil Engineering | Land Surveying
8340 Consumer Court Sarasota, FL 34240
Phone: (941) 377-9178 | www.amengfl.com
CA #33105 | LB #4334

0 40 80 160
SCALE IN FEET

CLIENT: LAUREL ROAD DEVELOPMENT, LLC
PROJECT: PORTOFINO CMU (AKA MIRASOL CMU)
TITLE: MASTER UTILITY PLAN

HORIZONTAL SCALE: 1" = 80'
VERTICAL SCALE: N/A
VERTICAL DATUM: NGVD29
PROJECT NUMBER: VANG0032
SHEET NUMBER: 07

PROJECT ENGINEER:
D. SHAWN LEINS, PE
DATE
FLORIDA P.E. No. 41078

BCLAYBROOKE
©AM Engineering 2020

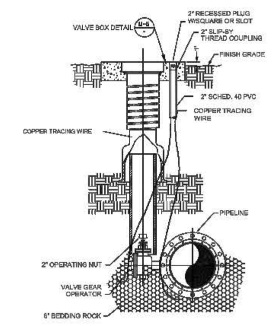

1.) PLUG VALVES SHALL BE MANUFACTURED BY DEZURIK.
2.) SEAT OF PLUG VALVE SHALL BE ON THE UPSTREAM SIDE OF THE BODY.
3.) VALVE SHALL BE INSTALLED IN CONFORMANCE WITH MANUFACTURES RECOMMENDATIONS.
4.) ALL SEWER FORCE MAIN PLUG VALVES SHALL BE GEAR OPERATED.

PLUG VALVE DETAIL
(SEWER FORCE MAINS ONLY)
N.T.S.

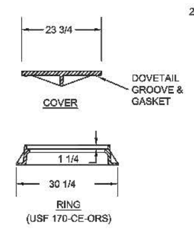

1.) MATERIAL: ASTM-A48 CLASS 30B GRAY IRON
2.) RING WT: 155 LBS. APP.
3.) COVER WT: 150 LBS. APP.
4.) INFLOW DISH REQUIRED

TYPICAL COVER

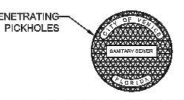

1.) HEAVY DUTY 130 LB. COVER
2.) MANHOLE COVER SHALL BE U.S FOUNDARY TYPE CE-ORS
3.) SHALL BE LABELLED AS ILLUSTRATED ABOVE WITH BOTH "CITY OF VENICE" AND TYPE OF UTILITY (SANITARY, STORM, ETC.)

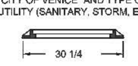

RING
(USF 680-CE-ORS)

1.) MATERIAL: ASTM-A48 CLASS 30B GRAY IRON
2.) RING WT: 90 LBS. APP.
3.) COVER WT: 130 LBS. APP.

LOW PROFILE COVER

MANHOLE COVERS DETAIL
(ALL UNITS IN INCHES)
N.T.S.

CITY OF VENICE
ENGINEERING DEPARTMENT
401 WEST VENICE AVE.
VENICE FL 34285
(941) 486-2626
FAX (941) 480-3031
UTILITIES - SEWER
PLUG VALVE & MANHOLE COVERS
DATE JAN. 2019
SHEET NO. S-1

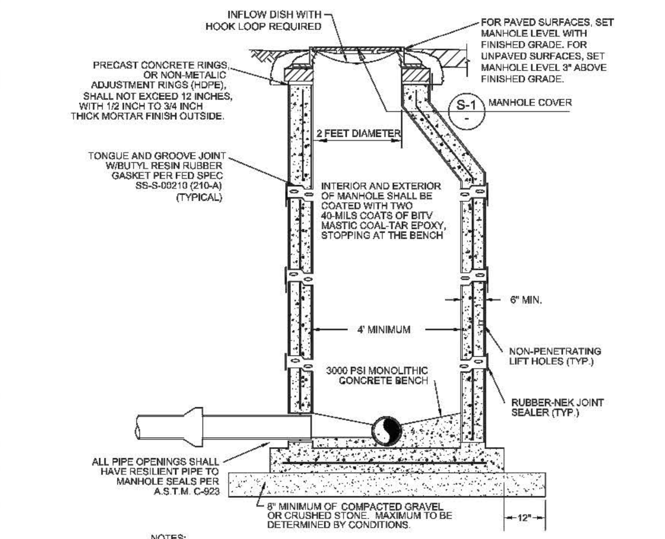

NOTES:
1.) MANHOLE SHALL CONFORM TO A.S.T.M. C-478 LATEST REVISION TYPE II CONCRETE, 4000 P.S.I. 28 DAY COMPRESSIVE STRENGTH
2.) TURBULENT MANHOLES, DROP MANHOLES, AND EXISTING MANHOLES RECEIVING FORCE MAINS SHALL BE LINED WITH AGRU SURE GRIP HDPE.
3.) ECCENTRIC CONE MANHOLES SHALL BE USED WHENEVER POSSIBLE. WHERE STRUCTURAL CONDITIONS DICTATE, A CONCENTRIC CONE MAY BE USED IN LIEU OF AN ECCENTRIC CONE.
4.) FOR MANHOLES LESS THAN 5 FEET IN DEPTH, A SHALLOW MANHOLE (DETAIL 8, THIS SHEET) SHALL BE USED.
5.) MONOLITHIC, DUCTILE IRON ADJUSTMENT RINGS MAY ONLY BE USED FOR SURFACE OVERLAY PROJECTS, NOT FOR NEW CONSTRUCTION.
6.) INFLOW DISH SHALL BE PROVIDED AND INSTALLED BY CONTRACTOR.

SANITARY SEWER MANHOLE DETAIL
N.T.S.

CITY OF VENICE
ENGINEERING DEPARTMENT
401 WEST VENICE AVE.
VENICE FL 34285
(941) 486-2626
FAX (941) 480-3031
UTILITIES - SEWER
SANITARY SEWER MANHOLE
DATE JAN. 2019
SHEET NO. S-2

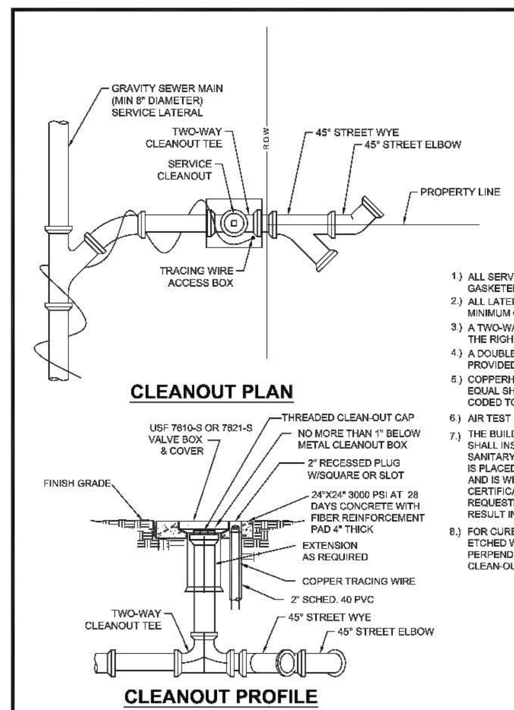

1.) ALL SERVICE LATERAL JOINTS SHALL BE GASKETED FROM MAIN WYE.
2.) ALL LATERAL SERVICES SHALL BE A MINIMUM OF SIX INCHES IN DIAMETER.
3.) A TWO-WAY CLEANOUT SHALL BE PROVIDED AT THE RIGHT OF WAY ON THE PROPERTY LINE.
4.) A DOUBLE-SWEEP CLEANOUT SHALL BE PROVIDED ON THE PRIVATE SIDE.
5.) COPPERHEAD TRACING WIRE #12 AWG OR EQUAL SHALL BE USED .IT SHALL BE COLOR CODED TO GREEN FOR SEWER
6.) AIR TEST REQUIRED.
7.) THE BUILDING GENERAL CONTRACTOR SHALL INSURE THE APPLICABLE SERVICING SANITARY SEWER CLEANOUT CONNECTION IS PLACED AT FINISH GRADE WITH COVER, AND IS WITH A CONCRETE PAD AT THE TIME CERTIFICATION OF OCCUPATION (CO) IS REQUESTED. NON COMPLIANCE MAY RESULT IN A DELAY OF CO.
8.) FOR CURBED ROADWAYS: CURB SHALL BE ETCHED WITH THE LETTER "S" DIRECTLY PERPENDICULAR TO THE SEWER CLEAN-OUT.

SANITARY SEWER SERVICE & CLEANOUT DETAIL
N.T.S.

CITY OF VENICE
ENGINEERING DEPARTMENT
401 WEST VENICE AVE.
VENICE FL 34285
(941) 486-2626
FAX (941) 480-3031
UTILITIES - SEWER
SEWER SERVICE & CLEANOUT
DATE JAN. 2019
SHEET NO. S-4

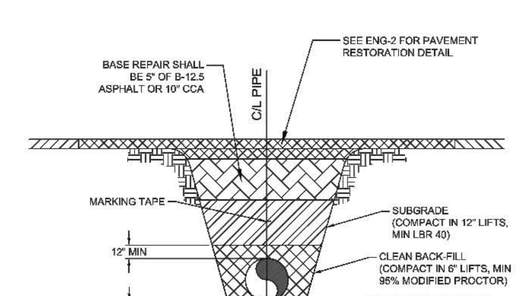

1.) COPPERHEAD TRACING WIRE #12 AWG OR EQUAL SHALL BE ATTACHED TO TOP OF PIPE AT 20' INTERVALS ON ALL SEWER MAINS. IT SHALL BE COLOR CODED GREEN FOR SEWER.
2.) MINIMUM COVER SHALL BE 36" FROM TOP OF PIPE TO FINISHED GRADE.
3.) INSTALLATION OF PIPE SHALL BE IN CONFORMANCE WITH MANUFACTURER'S RECOMMENDATIONS.
4.) PAVEMENT RESTORATION SHALL CONFORM WITH DETAIL ENG-2 OF THESE CITY STANDARDS.
5.) ALL UTILITIES (PUBLIC AND PRIVATE) THAT CROSS A DITCH / SWALE SHALL BE 36" MIN BELOW THE ACTUAL / DESIGN BOTTOM OF CONVEYANCE.
6.) MARKING TAPE SHALL BE PROVIDED PER U-1.

SEWER PIPE TRENCH DETAIL
N.T.S.

CITY OF VENICE
ENGINEERING DEPARTMENT
401 WEST VENICE AVE.
VENICE FL 34285
(941) 486-2626
FAX (941) 480-3031
UTILITIES - GENERAL
SEWER PIPE TRENCH
DATE JAN. 2019
SHEET NO. S-6

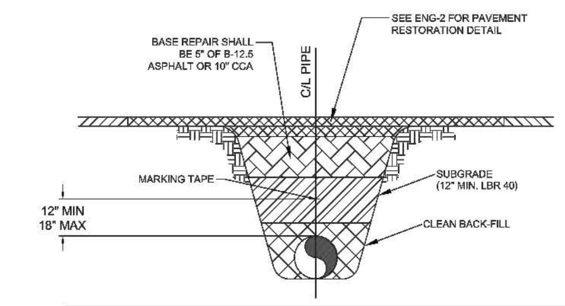

MARKING TAPE AND MESSAGES		
PIPE	TAPE COLOR	MESSAGE
PVC STORM WATER	WHITE	CAUTION STORM WATER OR STORM DRAIN BELOW
POTABLE WATER MAIN	BLUE	CAUTION POTABLE WATER MAIN BELOW
REUSE WATER MAIN	PURPLE	CAUTION REUSE WATER MAIN BELOW
SEWER FORCE MAIN	GREEN	CAUTION SEWER FORCE MAIN BELOW
SEWER & SERVICE LATERALS	GREEN	CAUTION SEWER MAIN BELOW

1.) COPPERHEAD TRACING WIRE #12 AWG OR EQUAL SHALL BE ATTACHED TO TOP OF PIPE AT 20' INTERVALS ON ALL RECLAIMED WATER, FORCE, OR POTABLE WATER MAINS. IT SHALL BE COLOR CODED TO REFLECT WHAT THE PIPE CARRIES. (BLUE = WATER, GREEN = SEWER, PURPLE = REUSE)
2.) MINIMUM COVER SHALL BE 36" FROM TOP OF PIPE TO FINISHED GRADE MAXIMUM COVER SHALL BE 42" FROM FINISHED GRADE UNLESS OTHERWISE APPROVED.
3.) INSTALLATION OF PIPE SHALL BE IN CONFORMANCE WITH MANUFACTURER'S RECOMMENDATIONS.
4.) PAVEMENT RESTORATION SHALL CONFORM WITH DETAIL ENG-2 OF THESE CITY STANDARDS.
5.) CONFLICTS - UTILIZE 45° BENDS WITH SEPARATION AS PER CITY DETAILS.
6.) ALL UTILITIES (PUBLIC & PRIVATE) THAT CROSS A DITCH/SWALE SHALL BE 36" MIN. BELOW THE ACTUAL/DESIGN BOTTOM OF CONVEYANCE.
7.) MARKING TAPE SHALL BE 3" WIDE (MIN.) DETECTIBLE UNDERGROUND WARNING TAPE. INSTALL CENTERED DIRECTLY OVER THE PIPE.
8.) SEE S-6 FOR GRAVITY SEWER PIPE TRENCH DETAIL.

PRESSURE PIPE TRENCH DETAIL
N.T.S.

CITY OF VENICE
ENGINEERING DEPARTMENT
401 WEST VENICE AVE.
VENICE FL 34285
(941) 486-2626
FAX (941) 480-3031
UTILITIES - GENERAL
UTILITY PIPE TRENCH
DATE JAN. 2019
SHEET NO. U-1

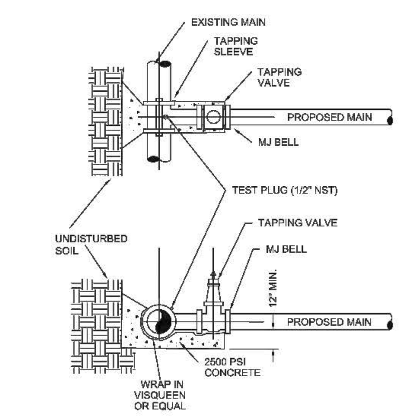

1.) EXISTING MAIN SHALL NOT BE TAPPED UNTIL THE ASSEMBLED SLEEVE AND VALVE ARE TESTED IN PLACE AT A MINIMUM OF 150 PSI FOR THIRTY MINUTES.
2.) UPON SUCCESSFUL TAPPING SLEEVE PRESSURE TEST (NOTE 1), THE THRUST BLOCK SHALL BE POURED AND HAVE SET FOR 24 HRS PRIOR TO TAPPING. READY-MADE THRUST BLOCKS CAN BE USED WITH CITY APPROVAL.
3.) STAINLESS STEEL TAPPING SLEEVE SHALL BE FORD. ALL HARDWARE SHALL BE STAINLESS STEEL. GASKETS SHALL BE VIRGIN SBR COMPOUND.
4.) GATE VALVES SHALL BE RESILIENT WEDGE-TYPE MANUFACTURED BY MUELLER OR AMERICAN VALVE. ALL GATE VALVES SHALL BE FUSION BONDED EPOXY COATED (INTERIOR AND EXTERIOR) MEET ANSI/AWWA C550, AND BE NSF61 CERTIFIED.
5.) TAPPING SLEEVES MAY ONLY BE USED WHEN THE TAP DIAMETER IS AT LEAST ONE PIPE SIZE SMALLER THAN THE DIAMETER OF THE MAIN BEING TAPPED.
6.) VALVE BOX ALIGNMENT DEVICE SHALL BE INSTALLED IN ACCORDANCE WITH W-1.

TAPPING SLEEVE & VALVE DETAIL
N.T.S.

CITY OF VENICE
ENGINEERING DEPARTMENT
401 WEST VENICE AVE.
VENICE FL 34285
(941) 486-2626
FAX (941) 480-3031
UTILITIES - GENERAL
TAPPING SLEEVE & VALVE
DATE JAN. 2019
SHEET NO. U-3

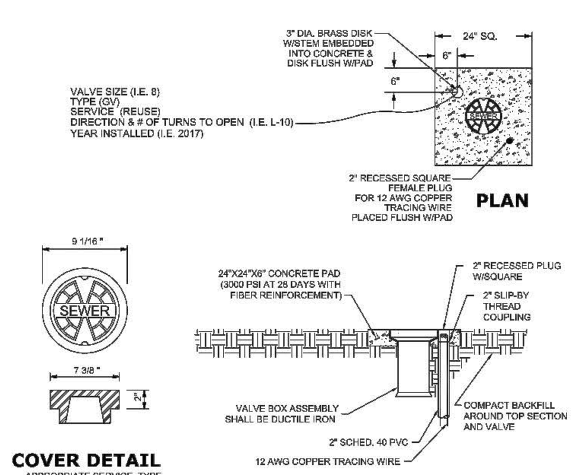

1.) PAVED AREAS: SET CONCRETE PAD AND COVER FLUSH WITH FINISHED PAVEMENT SURFACE.
2.) UNPAVED AREAS: SET PAD AND COVER 1 INCH ABOVE FINISHED GRADE.
3.) VALVES LOCATED IN DITCH AND OVER 4' DEPTH (LINE) MUST USE TRENCH ADAPTER VALVE BOX (AMERICAN FLOW CONTROL).
4.) COPPERHEAD TRACING WIRE #12 AWG OR EQUAL SHALL BE USED. IT SHALL BE COLOR CODED TO REFLECT WHAT THE PIPE CARRIES. (BLUE = WATER, GREEN = SEWER, PURPLE = REUSE)
5.) PRE-CAST PADS MAY BE USED WITH CITY APPROVAL.
6.) FOR CURBED ROADWAYS: CURB SHALL BE ETCHED WITH THE LETTER "V" DIRECTLY PERPENDICULAR TO THE VALVE BOX.
7.) VALVE BOX COVERS SHALL BE PAINTED BLUE FOR POTABLE WATER, PURPLE FOR REUSE WATER, AND GREEN FOR SEWER.

VALVE BOX DETAIL
N.T.S.

CITY OF VENICE
ENGINEERING DEPARTMENT
401 WEST VENICE AVE.
VENICE FL 34285
(941) 486-2626
FAX (941) 480-3031
UTILITIES - GENERAL
VALVE BOX
DATE JAN. 2019
SHEET NO. U-4

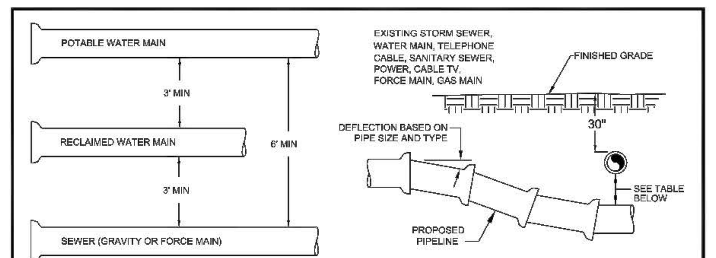

MINIMUM HORIZONTAL SEPARATION DISTANCES (FT)
(OUTSIDE OF PIPELINE TO OUTSIDE OF PIPELINE)

	WATER MAIN	FORCE MAIN	SANITARY SERVICE	REUSE MAIN	STORM WATER	OTHER UTILITIES (TELEPHONE, CABLE, ETC.)
WATER MAIN	3	6	6	3	3	3
FORCE MAIN	6	3	3	3	3	3
SANITARY SEWER	6	3	3	3	3	3
REUSE MAIN	3	3	3	3	3	3
STORM WATER	3	3	3	3	3	3
OTHER UTILITIES	3	3	3	3	3	3

MINIMUM VERTICAL SEPARATION DISTANCES (IN)
(OUTSIDE OF PIPELINE TO OUTSIDE OF PIPELINE)

	WATER MAIN	FORCE MAIN	SANITARY SERVICE	REUSE MAIN	STORM WATER	OTHER UTILITIES (TELEPHONE, CABLE, ETC.)
WATER MAIN	6	12	12	6	6	6
FORCE MAIN	12	6	6	6	6	6
SANITARY SEWER	12	6	6	6	6	6
REUSE MAIN	6	6	6	6	6	6
STORM WATER	6	6	6	6	6	6
OTHER UTILITIES	6	6	6	6	6	6

1.) MAXIMUM JOINT DEFLECTION SHALL BE 90% OF MANUFACTURER'S RECOMMENDATION.
2.) WHEREVER POSSIBLE, THE LAYOUT OF UTILITIES SHALL PLACE SANITARY SEWER AND SEWER FORCE MAINS BELOW RECLAIMED MAINS AND BELOW WATER MAINS, RESPECTIVELY. WHERE WATER MAINS ARE ABOVE GRAVITY SEWERS OR WASTEWATER FORCE MAINS, A VERTICAL CLEARANCE OF 6 INCHES IS ACCEPTABLE. STORM SHALL BE PLACED BELOW BOTH WATER AND SEWER WHERE POSSIBLE.
3.) ACCEPTABLE VARIANCES:
A. WHERE HORIZONTAL SEPARATION CANNOT BE MAINTAINED, C900 DR14 PVC PIPE SHALL BE USED FOR ONE OF THE PIPELINES.
B. WHERE VERTICAL CLEARANCE CANNOT BE MAINTAINED, ONE FULL LENGTH OF DR14 C900 PIPE SHALL BE INSTALLED CENTERED AT THE POINT OF CROSSING.
C. WHERE 36" MINIMUM DEPTH OF COVER CANNOT BE MAINTAINED, SPECIAL PROTECTION OR PIPE MATERIAL UPGRADE MAY BE REQUIRED, AT THE DISCRETION OF THE UTILITY DEPARTMENT.
4.) NO UTILITY PIPE SHALL PASS THROUGH, OR COME IN CONTACT WITH ANY PART OF A SANITARY MANHOLE OR STORMWATER STRUCTURE WITHOUT APPROVAL FROM THE UTILITIES DIRECTOR OR CITY ENGINEER.

UTILITY CONFLICT & SEPARATION DETAIL
N.T.S.

CITY OF VENICE
ENGINEERING DEPARTMENT
401 WEST VENICE AVE.
VENICE FL 34285
(941) 486-2626
FAX (941) 480-3031
UTILITIES - GENERAL
UTILITY CONFLICTS & SEPARATIONS
DATE JAN. 2019
SHEET NO. U-5

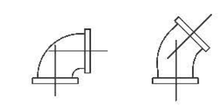

1.) ALL PIPE FITTINGS SHALL BE COMPACT, DUCTILE IRON.
2.) ALL APPLICATIONS (RAW, POTABLE, REUSE, SEWER) SHALL BE FUSION BONDED EPOXY COATED INSIDE AND OUT.
3.) ALL FITTINGS SHALL MEET ANSI/AWWA C116/A21.16 STANDARDS.

PIPE FITTINGS
N.T.S.

SERVICE	COLOR	MATERIAL/CLASS
POTABLE WATER MAIN	BLUE	AWWA C900 PVC / DR 18 FUSIBLE C900 PVC / DR 18 HDPE PPI PE 4710 / DR 11 (DUCTILE IRON PIPE SIZE)
RAW WATER MAIN	WHITE	
REUSE MAIN	PURPLE	
FORCE MAIN (MIN. 4" DIAMETER)	GREEN	
WATER SERVICE	BLUE	PE (POLYTUBING) / DR 9
REUSE SERVICE	PURPLE	PE (POLYTUBING) / DR 9
GRAVITY SEWER MAIN (MIN. 8" DIAMETER)	GREEN	ASTMD3034 / SDR 26 FUSIBLE PVC / SDR 26
SEWER LATERAL (MIN. 6" DIAMETER)	GREEN	ASTMD3034 / SDR 26 / SDR 35 / SCH 40 PVC

PIPE MATERIAL SCHEDULE
N.T.S.

CITY OF VENICE
ENGINEERING DEPARTMENT
401 WEST VENICE AVE.
VENICE FL 34285
(941) 486-2626
FAX (941) 480-3031
UTILITIES - GENERAL
PIPE FITTINGS & MATERIAL
DATE JAN. 2019
SHEET NO. U-6

MINIMUM LENGTH (FT) OF FORCE MAIN TO BE RESTRAINED ON EACH SIDE OF FITTING

FITTING		PIPE SIZE (INCHES) 4	6	8	10	12	16	18	20	24
45 BEND:	H	6	9	12	14	16	21	23	25	29
	VU	4	6	7	9	10	13	15	16	19
	VD	12	20	26	32	37	48	53	28	68
22.5 BEND:	H	3	4	6	7	8	10	11	12	14
	VU	2	3	4	4	5	6	7	8	9
	VD	7	10	13	15	18	23	26	28	33
11.25 BEND:	H	2	2	3	3	4	5	5	6	7

MINIMUM LENGTH (FT) OF WATER OR REUSE MAIN TO BE RESTRAINED ON EACH SIDE OF FITTING

FITTING		PIPE SIZE (INCHES) 4	6	8	10	12	16	18	20	24
90 BEND:	H	23	33	43	51	60	76	83	90	104
45 BEND:	H	10	14	18	21	25	31	34	37	43
	VU	6	8	11	13	16	20	22	24	28
	VD	22	30	40	48	56	72	80	87	102
22.5 BEND:	H	5	7	8	10	12	15	17	18	21
	VU	3	4	5	6	7	10	11	12	14
	VD	10	15	19	23	27	35	38	42	49
11.25 BEND:	H	2	3	4	5	6	7	8	9	10
PLUGS:		52	73	96	115	136	174	193	211	246

ABBREVIATIONS: H=HORIZONTAL, VU=VERTICAL UP, VD=VERTICAL DOWN.
1.) FOR TEE OR REDUCER FITTINGS SUBMIT RESTRAINED JOINT LENGTH CALCULATIONS TO CITY ENGINEER FOR REVIEW AND APPROVAL, USING THE ASSUMPTIONS LISTED ABOVE.
2.) RESTRAINED JOINT LENGTH FOR WATER AND REUSE MAINS BASED ON TEST PRESSURE OF 150 PSI. RESTRAINED JOINT LENGTH FOR FORCE (SEWER) MAINS BASED ON TEST PRESSURE OF 100 PSI. CALCULATIONS WERE MADE USING EBAA IRON SOFTWARE (AVAILABLE AT WWW.EBAA.COM) AND THE FOLLOWING ASSUMPTIONS: GRANULAR MATERIAL (GM) SOIL TYPE, TRENCH TYPE 3, BURY DEPTH OF 3 FT, AND SAFETY FACTOR OF 2 TO 1. IF FIELD CONDITIONS DIFFER FROM ABOVE ASSUMPTIONS EOR SHALL PROVIDE CALCULATIONS BASED ON ACTUAL CONDITIONS.
3.) RESTRAINED JOINT SHALL BE USED ON ALL JOINTS FROM ANY MAIN TEE TO ANY FIRE HYDRANT ASSEMBLY.
4.) THRUST BLOCKS WILL NOT BE ACCEPTED, UNLESS OTHERWISE APPROVED BY THE CITY ENGINEER.
5.) ALL HARDWARE SHALL BE SS (316 WHEN AVAILABLE) OR EPOXY COATED.

PRESSURE MAIN RESTRAINED JOINT TABLE
N.T.S.

CITY OF VENICE
ENGINEERING DEPARTMENT
401 WEST VENICE AVE.
VENICE FL 34285
(941) 486-2626
FAX (941) 480-3031
UTILITIES - GENERAL
RESTRAINED JOINT TABLE
DATE JAN. 2019
SHEET NO. U-7

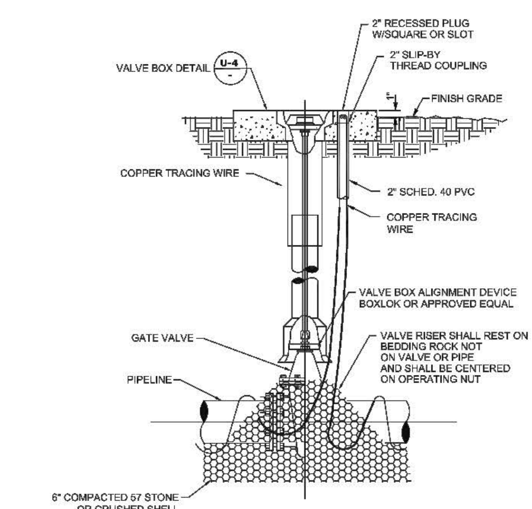

1.) GATE VALVES SHALL BE RESILIENT WEDGE-TYPE MANUFACTURED BY MUELLER, AMERICAN VALVE, OR EQUAL. ALL GATE VALVES SHALL BE FUSION BONDED EPOXY COATED (INTERIOR AND EXTERIOR) MEET ANSI/AWWA C550, AND BE NSF61 CERTIFIED.
2.) FOR VALVES LARGER THAN 12" IN USE BUTTERFLY STYLE VALVE.
3.) VALVE SHALL BE INSTALLED IN CONFORMANCE WITH MANUFACTURER'S RECOMMENDATIONS.
4.) COPPERHEAD TRACING WIRE PART #12 AWG OR EQUAL SHALL BE USED. IT SHALL BE COLOR CODED TO REFLECT WHAT THE PIPE CARRIES. (BLUE = WATER, PURPLE = REUSE)
5.) FOR CURBED ROADWAYS: CURB SHALL BE ETCHED WITH THE LETTER "V" DIRECTLY PERPENDICULAR TO THE VALVE BOX.
6.) ALL BOLTS AND HARDWARE SHALL BE 316 SS (WHEN AVAILABLE).

GATE VALVE DETAIL
(WATER AND REUSE ONLY)
N.T.S.

CITY OF VENICE
ENGINEERING DEPARTMENT
401 WEST VENICE AVE.
VENICE FL 34285
(941) 486-2626
FAX (941) 480-3031
UTILITIES - WATER
GATE VALVE
DATE JAN. 2019
SHEET NO. W-1

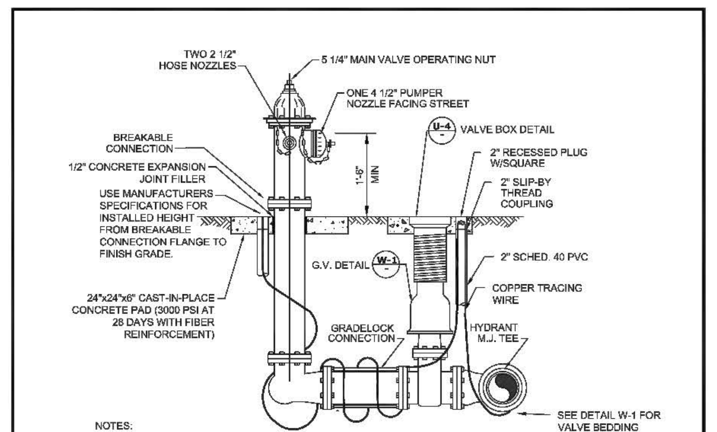

NOTES:
1.) POTABLE WATER FIRE HYDRANTS SHALL BE PAINTED "SAFETY YELLOW".
2.) REUSE FIRE HYDRANTS SHALL BE PAINTED PANTONE PURPLE 522C AND TAGGED WITH A PERMANENT LABEL "RECLAIMED WATER-DO NOT DRINK."
3.) HYDRANT SHALL BE MUELLER SUPER CENTURIAN MODEL A423, AMERICAN B84BV WITH BREAK-AWAY FEATURE. ALL BOLTS SHALL BE SS (BONNET, SAFETY FLANGE, SHOE).
4.) RESTRAINED JOINTS SHALL BE USED BETWEEN TEE AND HYDRANT.
5.) HYDRANTS SHALL HAVE "OUT OF SERVICE" TAGS AND BE BAGGED UNTIL MAINS ARE ACCEPTED BY CITY.
6.) ALL WEEP HOLES SHALL BE PLUGGED.
7.) HYDRANT LOCATED AT LEAST 3' OR MORE FROM ANY STORM WATER PIPE OR DITCH AND AT LEAST 6' OR MORE FROM ANY SANITARY SEWER STRUCTURE.
8.) FOR CLEARANCE ISSUES, PLEASE REFER TO CURRENT FLORIDA FIRE PREVENTION CODE REQUIREMENTS.
9.) COPPERHEAD TRACING WIRE #12 AWG OR EQUAL SHALL BE USED. IT SHALL BE COLOR CODED TO REFLECT WHAT THE PIPE CARRIES. (BLUE = WATER, PURPLE = REUSE)
10.) ASSEMBLY SHALL BE BEDDED IN 8" OF 57 STONE OR CRUSHED SHELL AND INSTALLED AT PROPER BURIAL DEPTH.
11.) FIRE HYDRANT ASSEMBLY INCLUDES GATE VALVE TO BE LOCATED AS CLOSE TO WATER MAIN AS POSSIBLE.
12.) GRADELOCK CONNECTION TO BE USED BETWEEN VALVE AND HYDRANT. FUSION BONDED EPOXY. ROTATE TO FINAL GRADE.

FIRE HYDRANT ASSEMBLY DETAIL
N.T.S.

CITY OF VENICE
ENGINEERING DEPARTMENT
401 WEST VENICE AVE.
VENICE FL 34285
(941) 486-2626
FAX (941) 480-3031
UTILITIES - WATER
FIRE HYDRANT ASSEMBLY
DATE JAN. 2019
SHEET NO. W-2

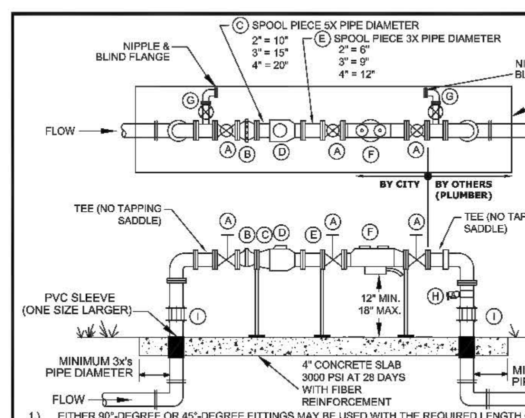

(A) FLANGED GATE VALVE
(B) STRAINER
(C) SPOOL PIECE
(D) METER (PROVIDED BY THE CITY)
(E) SPOOL PIECE
(F) BACKFLOW PREVENTION ASSEMBLY
(G) LOCKABLE BALL VALVE
(H) PRESSURE RELIEF VALVE
(I) UNION (SWEAT OR COMPRESSION)

1.) EITHER 90°-DEGREE OR 45°-DEGREE FITTINGS MAY BE USED WITH THE REQUIRED LENGTH OF RESTRAINED JOINT FITTINGS.
2.) BACKFLOW PREVENTION ASSEMBLY TYPE SHALL BE DETERMINED BY THE CITY OF VENICE UTILITIES DEPARTMENT'S MOST CURRENT CROSS-CONNECTION CONTROL PROGRAM MANUAL, AND SHALL BE INSTALLED IMMEDIATELY FOLLOWING THE METER.
3.) ALL BACKFLOW PREVENTION ASSEMBLIES SHALL BE APPROVED BY THE UNIVERSITY OF SOUTHERN CALIFORNIA FOUNDATION FOR CROSS-CONNECTION CONTROL AND HYDRAULIC RESEARCH AND/OR ASSE 1013.
4.) ALL CONCRETE PIPE PENETRATIONS SHALL BE PROTECTED WITH A PVC SLEEVE, ONE SIZE LARGER THAN RISER PIPE.
5.) VALVES SHALL BE FULL PORTED FULL FLOW BALL VALVES OR RESILIENT WEDGE NON-RISING STEM GATE VALVES.
6.) PIPE BETWEEN TAP & ISOLATION VALVE SHALL BE C900 PVC.
7.) THE WATER METER SHALL MATCH THE BACKFLOW AND ASSEMBLY PIPE SIZE.
8.) METERS 1-1/2" AND UP WILL HAVE FLANGES. LAY LENGTHS MUST BE VERIFIED PRIOR TO CONSTRUCTION OF ASSEMBLIES.
9.) ASSEMBLIES 2" AND UP REQUIRE ONE UNION ON THE UPSTREAM RISER.
10.) ASSEMBLIES 1-1/2" AND SMALLER REQUIRE TWO UNIONS.
11.) METERS 1-1/2" AND SMALLER REQUIRE A LOCKABLE CURB STOP.
12.) NO SPOOL PIECE REQUIRED FOR 3/4", 1", OR 1 1/2".
13.) ALL COMMERCIAL AND MULTI FAMILY UNIT METERS MUST BE ABOVE GRADE. REUSE METERS 2" AND LESS MAY BE BELOW GROUND.
14.) BACKFLOW PREVENTION ASSEMBLY AND BYPASS ARE NOT REQUIRED FOR REUSE METER ONLY.
15.) BACKFLOW PREVENTION ASSEMBLIES SHALL ONLY BE BY-PASSED IF A TEMPORARY RP IS INSTALLED ON BY-PASS.
16.) NO BRANCH OR TEE SERVICE CONNECTIONS, OTHER THAN THE UTILITIES METER BY-PASS RETURN TEE, SHALL EXIST BETWEEN THE WATER METER AND BACKFLOW PREVENTER.
17.) THE ENGINEER OF RECORD SHALL SUBMIT METER SIZING CALCULATIONS BASED ON SERVICE DEMAND PER AWWA M-22 AND SUBJECT TO APPROVAL BY THE UTILITY DEPARTMENT.
18.) PARALLEL BACKFLOW ASSEMBLY MAY BE PERMITTED TO ALLOW FOR UNINTERRUPTED SERVICE AND SHALL PROVIDE THE SAME DEGREE OF PROTECTION OR GREATER.
19.) NO PVC SHALL BE PERMITTED ON THE CITY SIDE.

METER SIZE (IN.)	BY-PASS SIZE
3/4"	NO BYPASS
1"	NO BYPASS
1 1/2"	1"
2"	1 1/2"
3"	2"
4"	3"

WATER & REUSE METER & BACKFLOW PREVENTION ASSEMBLY
ABOVE GROUND COMMERCIAL/MULTI-UNIT/SINGLE SERVICE/MASTER METER (WITH BY-PASS AROUND METER ONLY) N.T.S.

CITY OF VENICE
ENGINEERING DEPARTMENT
401 WEST VENICE AVE.
VENICE FL 34285
(941) 486-2626
FAX (941) 480-3031
UTILITIES - WATER
WATER & REUSE METER & BACKFLOW
DATE JAN. 2019
SHEET NO. W-4

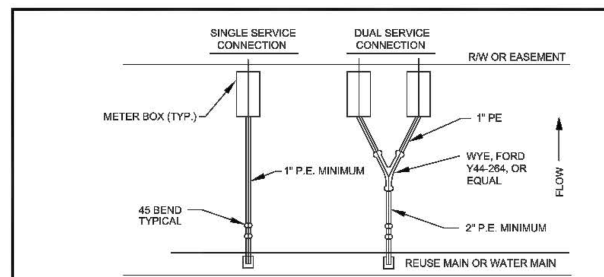

RESIDENTIAL METER CONNECTION DETAIL
N.T.S.

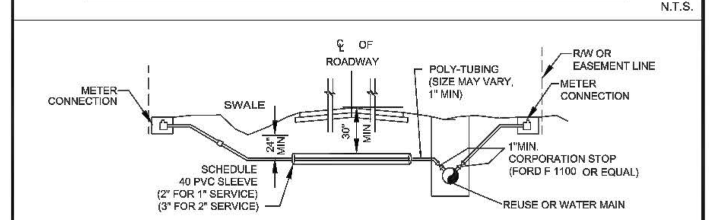

1.) TAPS SHALL NOT BE CLOSER THAN TWO FEET APART OR WITHIN TWO FEET OF ANY JOINT.
2.) TAPS IN MULTIPLE GROUPS SHALL NOT BE MADE IN THE SAME LONGITUDINAL LINE OF THE PIPE BUT MUST BE STAGGERED VERTICALLY.
3.) TAPPING SADDLE SHALL BE EPOXY COATED, DUCTILE IRON BODY WITH SS 316 BAND(S) AND HARDWARE.
4.) BRASS FITTINGS AND BALL VALVES SHALL BE FORD F1100 OR EQUAL.
5.) ALL SERVICES SHALL HAVE COPPER TRACING WIRE.
6.) ALL SLEEVE ENDS SHALL BE SEALED WITH FOAM SEAL.
7.) INSERT STIFFENERS WILL NOT BE ACCEPTABLE.
8.) ALL WATERWORKS BRASS MUST BE LEAD FREE.
9.) METER SIZE AND SERVICE LINE PIPING DOWNSTREAM OF METER SHALL BE MINIMALLY SIZED BASED ON FIXTURE CALCS AS DETERMINED BY THE EOR.
10.) FOR CURBED ROADWAYS: CURB SHALL BE ETCHED WITH THE LETTER "W" FOR WATER SERVICE AND "R" FOR REUSE SERVICE DIRECTLY PERPENDICULAR TO THE METER.

WATER & REUSE SERVICE CONNECTION
N.T.S.

CITY OF VENICE
ENGINEERING DEPARTMENT
401 WEST VENICE AVE.
VENICE FL 34285
(941) 486-2626
FAX (941) 480-3031
UTILITIES - WATER
RESIDENTIAL METER & SERVICE CONNECTION
DATE JAN. 2019
SHEET NO. W-8

△REV. No.	REV. DATE	REVISION DESCRIPTION	BY	△REV. No.	REV. DATE	REVISION DESCRIPTION	BY

CALL BEFORE YOU DIG!
"SUNSHINE STATE ONE-CALL CENTER"
1-800-432-4770
THE CONTRACTOR SHALL NOTIFY "SUNSHINE STATE ONE-CALL CENTER" AND ALL OTHER UTILITIES FOR LOCATION OF EXISTING FACILITIES PRIOR TO BEGINNING CONSTRUCTION.

ISSUE DATE: 11-08-19
ISSUED BY: MSL
ISSUE DESCRIPTION: PRELIMINARY PLAT

AM ENGINEERING, LLC.
Civil Engineering | Land Surveying
8340 Consumer Court Sarasota, FL 34240
Phone: (941) 377-9178 | www.amengfl.com
CA #33105 | LB #4334

CLIENT: LAUREL ROAD DEVELOPMENT, LLC
PROJECT: PORTOFINO CMU (AKA MIRASOL CMU)
TITLE: WATER AND SEWER DETAIL

HORIZONTAL SCALE: N/A
VERTICAL SCALE: N/A
VERTICAL DATUM: NGVD29
PROJECT NUMBER: VANG0032
SHEET NUMBER: 08

PROJECT ENGINEER:
D. SHAWN LEINS, PE
DATE
FLORIDA P.E. No. 41078

©AM Engineering 2020 Saved: 3/4/2020 11:31:31 AM | Plotted: 3/04/2020 11:32:43 AM | V:\active\VANG0032\design\active\sheet\Preliminary Plat\VANG32-08-WSD.dwg|Layout